ENGINE COOLANT TEMPERATURE SE...

ENGINE COOLANT TEMPERATURE SENSOR REPLACEMENT (ENGINE BLOCK) (ENGINE CONTROLS/FUEL - 1.6L (L2W OR LXT))

Document ID# 2206329

Engine Coolant Temperature Sensor Replacement (Engine Block)

Removal Procedure

1. Open the hood.
2. Disconnect the battery negative cable. Refer to Battery Negative Cable Disconnection and Connection.
3. Raise and support the vehicle. Refer to Lifting and Jacking the Vehicle.

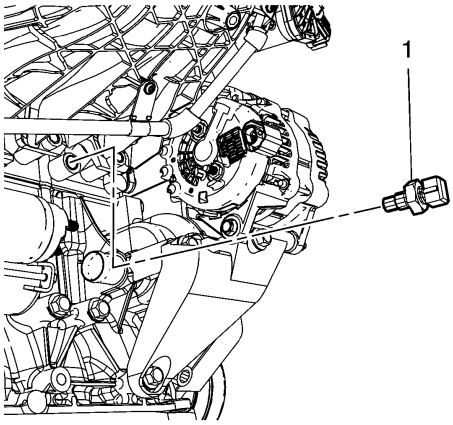

4. Disconnect the temperature sensor wiring harness plug from the temperature sensor (1).
5. Remove the temperature sensor (1).

Installation Procedure

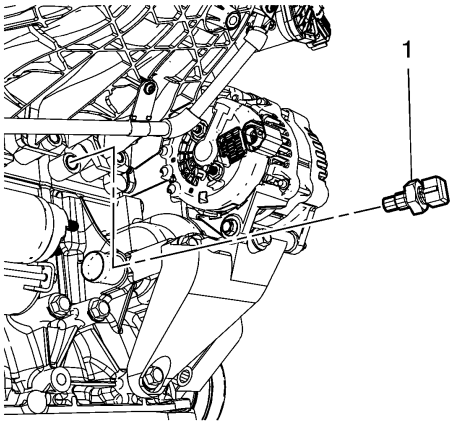

Caution: Refer to Fastener Caution

1. Install the temperature sensor and tighten to **20 Y (15 lb ft).**
2. Connect the temperature sensor wiring harness plug to the temperature sensor (1).
3. Lower the vehicle.
4. Connect the battery negative cable. Refer to Battery Negative Cable Disconnection and Connection.
5. Close the hood.

© 2014 General Motors. All rights reserved.

Portions of materials contained herein are sourced from General Motors Inc., Co.

Copyright 2007 - 2014 Service Repair Solutions, Inc.