Graded Project

National Electrical Code

National Electrical Code

INTRODUCTION

This next portion of your program is a project-based assignment designed for you to demonstrate your understanding of the *National Electrical Code* and your ability to apply the requirements and their interpretations to some typical residential building applications and one industrial application. As you have learned, the *National Electrical Code (NEC)* is a reference manual that outlines requirements for the installation of electrical equipment. The *NEC* is published by the National Fire Protection Association (NFPA) and is updated every three years to reflect changes in the industry.

The exact requirements for the installation of electrical equipment in your area will vary depending on local regulations. You learned in your studies that the application of the Code is rarely an exact science and that the Authority Having Jurisdiction (AHJ) is often the final determination of local code compliance. However, almost all electrical requirements are based on the *National Electrical Code.* Therefore, it's very important to understand the *NEC* thoroughly and be able to apply it to your work.

One objective of this project is to help you appreciate that you don't to have to memorize the various *NEC* codes. You'll be asked to use the *NEC* in the way that it was designed, as a rule book of sorts, that you will apply, step-by-step, through some interesting and challenging problems. All of the submissions for this assignment are open-book, so you can relax and focus on developing your skills in using the *NEC*.

Before you begin, this is a good time to simply review the *NEC* and to locate the articles that you would expect to apply to common building projects. Familiarize yourself with the

locations of common applications in the codes, as you'll need this information to complete this project. In this project, you'll also be looking at electrical wiring diagrams. Therefore, you may also want to review the material on how to read these diagrams before you begin this project.

Interpreting the floor plan wiring diagram for a typical residence, then carrying out the required wiring, is no simple matter. To remind you of the details which must often be addressed in a typical residential project, a wiring diagram was included with this portion of your program. The stand-alone drawing shows a complete wiring diagram for one floor of a typical residence. As you can see, this typical residence contains many electrical outlets and devices. All of these devices must be installed to satisfy *NEC* requirements. You should note that the stand-alone drawing isn't a part of the actual assignments that you'll complete; it's simply a good practice tool to brush-up on your print-reading skills.

In this project, you'll use your knowledge of the *NEC* to answer a variety of questions about electrical circuits. Because this is an application-type project that involves real-life scenarios, the project will take some time to complete. Using the *NEC* can be time consuming when you're first learning, so don't become frustrated if this project takes a little longer to complete than you expected.

You can submit this project in one of two ways: (1) Print this project booklet, write your answers to the exercises inside the printout, and mail the booklet to the school along with the answer sheet found in the back. (2) Create a Word document of your answers, scan your marked up Figure 7, and upload your project on the student portal.

Throughout this project, you'll be required to answer questions. In fact, there are a total of 40 questions (or combinations of questions) for you to answer, including two tables to be filled in, as well as an additional figure to be marked up. Grading of this project will be as follows:

- Questions 1 through 40 (except Question 11 and Question 40): 2 points each
- Question 11 (requires completion of Table 1): 5 points

- Markup of Figure 7: 10 points
- Question 40 (requires completion of Table 2): 5 points

Total Possible Score: 100 points

Now that you understand the basic goals of your project, let's get started.

PART 1: LOAD CALCULATION, SINGLE-FAMILY DWELLING

When an electrician installs the wiring in a new building, he or she often needs to determine the service amperage. To accurately determine the service amperage, the electrician must be able to calculate all of the various loads associated with general lighting circuits, small-appliance branch circuits, and fixed-appliance circuits that supply ranges, dryers, and HVAC systems. The *NEC* has specific guidelines for performing these calculations.

In this exercise, you'll use the *Standard Method* to perform the load calculations for a one-family residence. As you work through this exercise, please write out all of your calculations. To receive credit for the questions, you must show exactly how you arrived at each solution. (Use scrap paper for preliminary calculations, if you need to.)

Building Electrical Specifications:

You'll be required to determine specific circuit loads, the minimum service, and related conductor sizes for a single-family home with the following electrical specifications:

- Building Size: 3,800 square feet (exclusive of an unfinished basement, not adaptable for future use, an unfinished attic, and open porches)
- Small Appliance Branch Circuits: 3
- Laundry Branch Circuits: 1

- Fastened-in-Place Appliances: Water heater (28 kVA), Dishwasher (1,200 VA), Food Disposal (1,200 VA), Attic Fans (2) @ 750 VA (1,500 VA total)
- Clothes Dryer: 5 kW
- Ranges, Ovens, Cooktops: Range 12 kW
- HVAC System: 3.5 Ton AC system 240 V, 17.9 A, Air handler 3.3 A)

Question 1: Total General Lighting and Receptacle Load

Determine the total general lighting and receptacle load by calculating the general lighting load, the small-appliance branch circuit load, and the laundry branch circuit load. Apply any demand factor as applicable. Show your calculations on the lines provided for Question 1 at the end of Part 1 of your project.

Question 2: Fixed-in-Place Appliance Load

Determine the total fixed-in-place appliance load. Show your calculations on the lines provided for Question 2 at the end of Part 1 of your project.

Question 3: Dryer Load

Determine the line and the neutral load for the dryer circuit in this residence. Show your calculations on the lines provided for Question 3 at the end of Part 1 of your project.

Question 4: Cooking Equipment Demand Load

Determine the line and the neutral load for the range in this residence. Show your calculations on the lines provided for Question 4 at the end of Part 1 of your project.

Question 5: HVAC Load

Determine the total AC load for the HVAC system in this residence. Show your calculations on the lines provided for Question 5 at the end of Part 1 of your project.

Question 6: Largest Motor Load

Determine the largest motor load for this residence. Do *not* consider the AC unit as a motor load. Show your calculations on the lines provided for Question 6 at the end of Part 1 of your project.

Question 7: Total Demand, Service Size and Service Conductors

Based on your calculations for questions 1–6, determine the total demand in VA for this residence, the minimum service size, and the minimum conductor sizes (THW) for the ungrounded and grounding electrode conductors (assume the neutral conductor to be the same as the ungrounded conductor). Show your calculations on the lines provided for Question 7 at the end of Part 1 of your project.

ANSWERS AND CALCULATIONS FOR PART 1

Answer to Question 1:

General Lighting and Receptacle Load: _____

Small-Appliance Branch Circuit Load: _____

Laundry Branch Circuit Load: _____

Total General Lighting and Receptacle Load _____

Answer to Question 2:

Total Fixed-in-Place-Appliance Load: _____

_____

Answer to Question 3:

Dryer Demand Load: Line _____Neutral _____

_____

Answer to Question 4:

Cooking Equipment Demand Load: Line _____Neutral ____

_____

Answer to Question 5:

HVAC Demand Load _____

_____

Answer to Question 6:

Largest Motor Demand Load _____

_____

Answer to Question 7:

Total Demand _____

Minimum Service Size _____

Minimum Size Ungrounded Conductor _____

Minimum Size Grounding Electrode Conductor _____

PART 2: RESIDENTIAL ROOM WIRING

Now that you've completed your load calculations and determined service size for a single-family dwelling, you'll move to Part 2 of this project, which will examine the wiring requirements for 3 basic residential room types: general living space (living rooms, dens, family rooms), a kitchen, and a bathroom.

General Living Space

To begin Part 2 of your project, you'll examine some general living space, one of the most basic wiring assignments in a home. Figure 1 illustrates some wiring that's found in a typical living room. Study this diagram carefully and review the *NEC* codes that apply to this type of room. Note that several outlets are shown in Figure 1. These outlets are typically used for lighting and simple appliances, such as entertainment systems and personal computers. The placement of the outlets in the room is important. Once you've reviewed the *NEC* articles that apply to this room, answer the following questions.

Question 8: Which article of the *NEC* describes the proper placement of outlets in this type of room?

_____

Question 9: Part 1: According to the *NEC*, what is the maximum wall space that's allowed between two adjacent outlets? _____ *Part 2:* How large must a wall space be to require an outlet? _____ *Part 3:* Should an outlet located at 7-feet up the wall from the floor, used to power a light fixture, be included in wall space requirement?

_____

Question 10: If the outlets in this room are supplied by a single 15A or 20A circuit, what is the maximum current that can be supplied (in amps) to a cord-and plug connected load?

_____

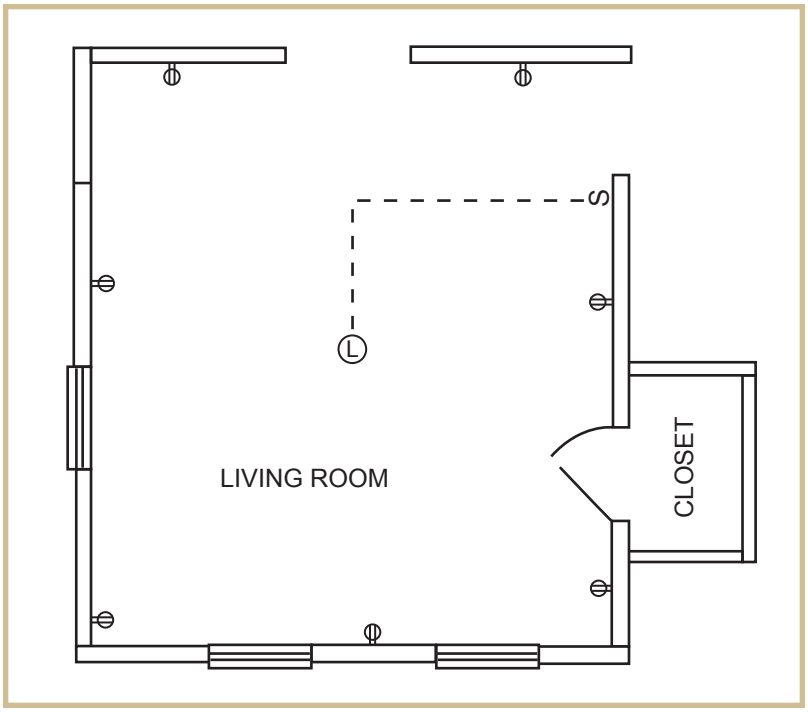

FIGURE 1—Refer to this diagram while you're working on questions related to the general living space.

Question 11: Look at the items listed in Table 1. Indicate which items are considered to be wall space by the *NEC,* and which items aren't considered to be wall space. (Place an "X" in the appropriate column next to each item.)

Table 1

Item	Considered to Be Wall Space	Not Considered to Be Wall Space
Fireplace		
Fixed glass panel		
Sliding segment of glass door		
Door opening		
Bar-type counter		
Wall space less than 1 foot wide		
Wall space 3 feet wide		
Doorway		
Fixed cabinet		

Question 12: Part 1: In Figure 1, note that a switch is located close to the door. This switch operates an overhead light fixture. This arrangement is a requirement of the *NEC*. Which article of the *NEC* covers this regulation for a room of this type? _____ *Part 2:* Other than the switch shown in Figure 1, what alternative way can be used to meet the *NEC* requirement? _____

Question 13: If the branch circuits supplying the receptacles in the figure are rated at 20 A, what is the minimum ampacity rating of the conductors in the branch circuit?

_____

Question 14: How many branch circuits that supply the room shown in Figure 1 are required to be GFCI protected according to the *NEC?*

_____

Kitchen

Now, you'll apply your knowledge of the *NEC* to a simple kitchen layout. Figure 2 shows some wiring in a typical kitchen found in a single-family dwelling. Electrical circuits in kitchens supply current to small appliances, electric ranges, dishwashers, and refrigerators; as well as lighting and general branch-circuit outlets.

The *NEC* is very specific about the installation of wiring in kitchen areas. Study the wiring carefully in Figure 2 and look up the codes that apply to this situation in your *NEC* codebook. Then, answer the following questions.

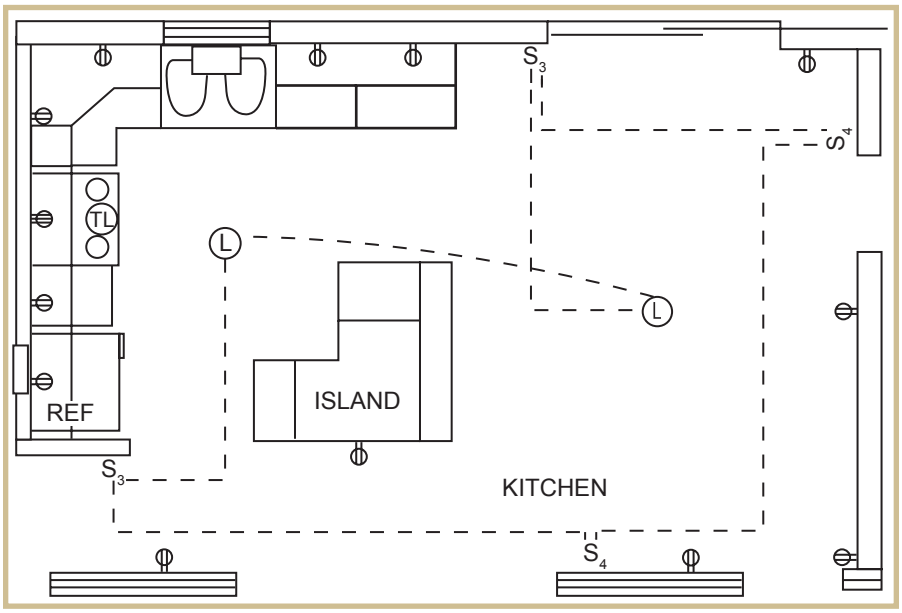

FIGURE 2—Refer to this diagram when you're working on questions related to the kitchen.

Question 15: What section of the *NEC* covers the use of GFCI-protected outlets in a residential kitchen?

_____

Question 16: How many of the outlets shown in Figure 2 are required to be GFCI protected by the *NEC?* Identify the location of the outlets you selected on the figure.

_____

Question 17: What is the maximum distance that can separate the two outlets located to the right of the sink in the figure?

_____

Question 18: The outlets along the countertop are to be used for small appliances. What is the minimum number of branch circuits that would be needed to supply just these small-appliance outlets?

_____

Question 19: Part 1: What is the maximum distance (in feet) that the receptacle intended for the refrigerator can be from that appliance? _____ *Part 2:* Name two common kitchen appliances that may require receptacle locations to be closer than required by 210.50 due to restrictions on cord lengths? _____

Question 20: What is the minimum circuit protection (in amps) and wire size needed for each of the required small-appliance circuits?

_____

Question 21: In Figure 2, note that an electrical outlet is shown on the island in the kitchen area. Is this outlet required by the *NEC*, or does it represent an *NEC* violation? Briefly explain your answer.

_____

Question 22: Looking again at the island counter in the kitchen. If the countertop above the outlet was extended 12 inches beyond the base of the cabinet to allow bar-stool seating at the counter, would that change the *NEC* status of the outlet? Briefly explain your answer.

_____

Question 23: Suppose that a built-in dishwasher is to be installed in this kitchen. Does the *NEC* allow the dishwasher to be connected to the existing small-appliance circuits?

_____

Question 24: Can any of the receptacles required for the countertop space be mounted in the actual countertop? Cite an *NEC* section and condition to support your answer.

_____

Question 25: Does the *NEC* allow the lighting circuit for a kitchen to be attached to the small-appliance circuits?

Question 26: What is the maximum height that the outlets on either side of the sink can be installed above the countertop surface?

Question 27: If the distance between the outlets on either side of the range in Figure 2 is less than 4 feet, are both outlets required per the *NEC*? Briefly explain your answer.

Bathroom

You've worked through the general living area and the kitchen, and next you'll look at the electrical wiring of a small residential bathroom. Figure 3 shows some wiring that's to be installed in a bathroom. Study the wiring shown in the figure carefully, and review the *NEC* articles that apply in these situations. Once you've reviewed the appropriate articles, answer the following questions about this wiring diagram.

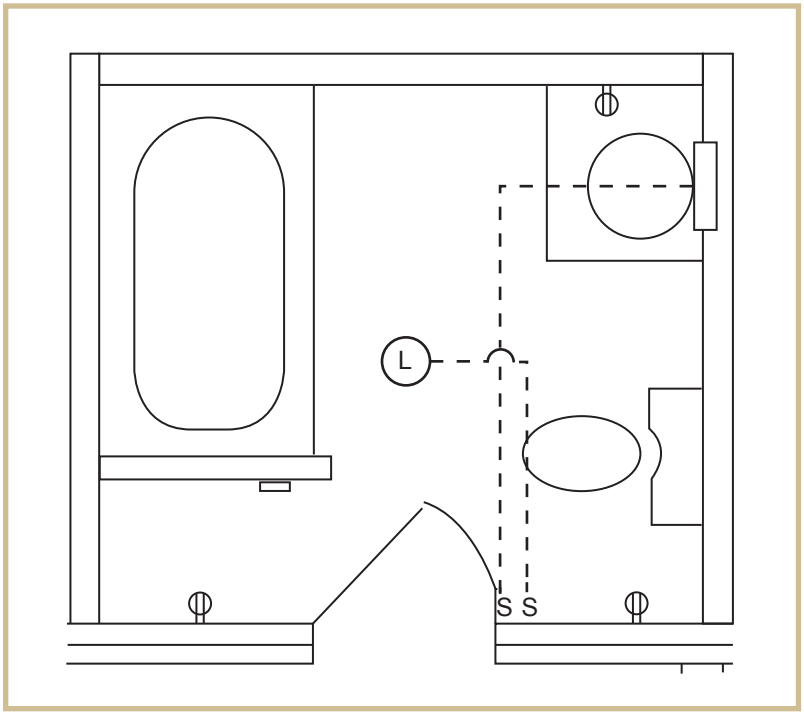

FIGURE 3—Refer to this diagram while you're working on questions related to the bathroom.

Question 28: What section of the *NEC* covers the use of GFCI-protected outlets in a residential bathroom?

Question 29: How many of the outlets shown are required to be GFCI protected by the *NEC?* Circle your selections (if any) on Figure 3.

Question 30: In what situation would the *NEC* allow any one of the outlets in this bathroom to supply power to an outlet in another room?

Question 31: The receptacle near the basin in figure can be mounted on the countertop and, if a listed assembly, in the countertop. In what position may the receptacle not be mounted?

Question 32: Looking again at the receptacle near the basin. What is the maximum distance the outlet can be away from the outside edge of the basin?

Question 33: You're rewiring the bathroom in Figure 3 as part of a remodeling project. The customer requests a GFCI receptacle on the back wall of the bathtub area, 5-feet from the top edge of the tub. Should you comply with the customer request? Site an *NEC* section to support your answer.

Question 34: Does the *NEC* allow the lighting circuit in the bathroom area to be connected to the same circuit as the outlet receptacles?

PART 3: BRANCH CIRCUIT SIZING

You've had a chance to test your skills at load calculations and service sizing, as you've just completed your evaluation of some basic room wiring. The next important skill you'll practice is the proper sizing of the various branch circuits that feed specialized equipment such as ranges, and water heaters.

In Part 3 of your project, you'll determine the proper size of the branch circuits for three wiring scenarios involving cooking equipment.

As you work through this exercise, please show all of your calculations on the calculation sheet at the end of Part 3. To receive credit for the questions, you must show exactly how you arrived at each solution. (Use scrap paper for preliminary calculations, if you need to, before you transfer your final calculations to the calculation sheet at the end of Part 3.)

Example 1: Suppose that you're working in a home that has a 15 kW oven that operates on 240 V. The oven is on a branch circuit by itself, as shown in Figure 4.

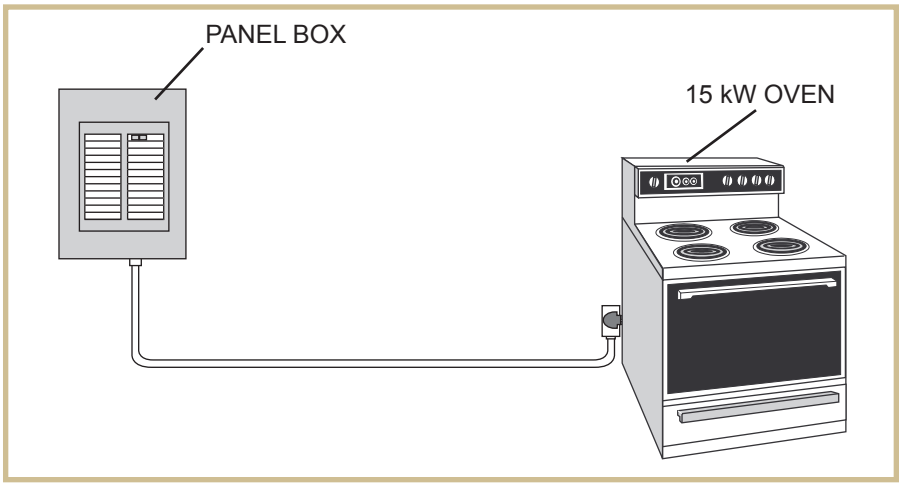

FIGURE 4—Diagram for Example 1

Question 35: What is the demand load for this circuit? (Show all of your calculations on the calculation sheet at the end of Part 3.)

_____

Question 36: What size TW copper conductor should be used for the branch circuit? (Show all of your calculations on the calculation sheet at the end of Part 3.)

Example 2: Suppose that you're working in a kitchen that contains one 8 kW counter-mounted cooking unit and two 6 kW wall-mounted ovens. All three appliances are served by the same 240 V branch circuit. This situation is illustrated in Figure 5.

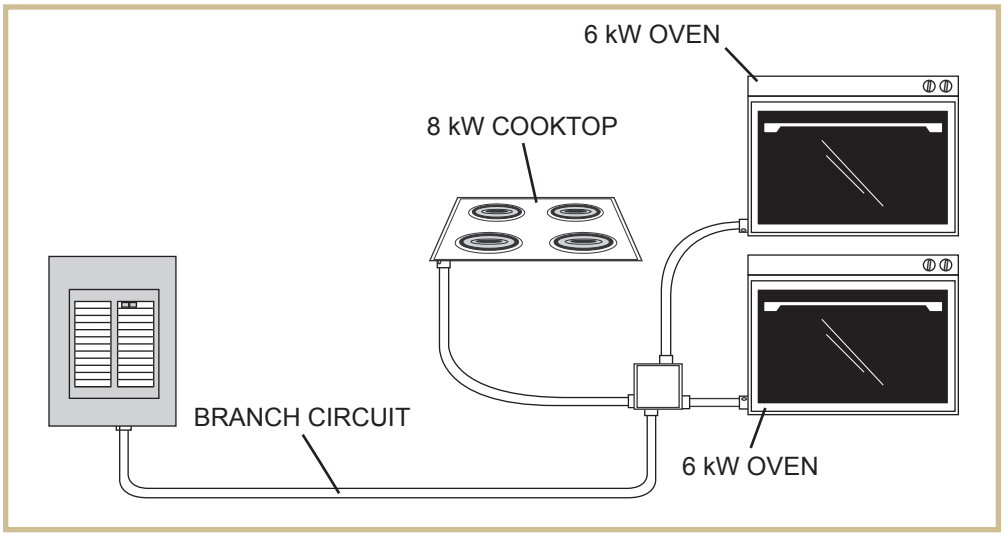

FIGURE 5—Diagram for Example 2

Question 37: What would be the demand load for this branch circuit? (Show all of your calculations on the calculation sheet at the end of Part 3.)

Question 38: What is the minimum-size TW copper conductor that should be used for this branch circuit? (Show all of your calculations on the calculation sheet at the end of Part 3.)

Example 3: Suppose that you're working in a building that contains commercial kitchen equipment. The kitchen contains three 3 kW ovens, a 20 kW water heater, and a 3 kW deep fryer, as shown in Figure 6.

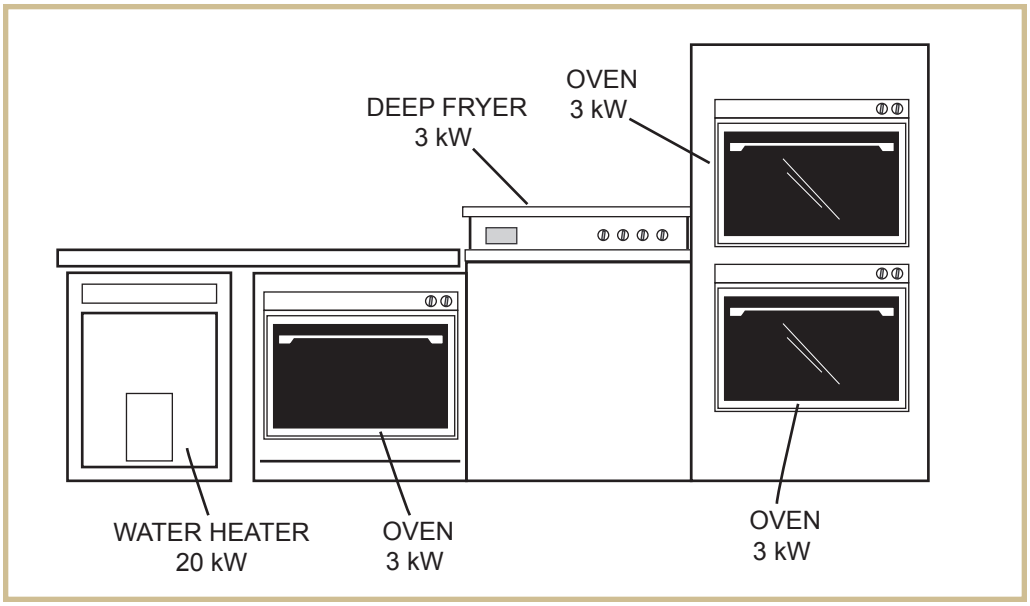

FIGURE 6—Diagram for Example 3

Question 39: What would be the demand load for all of these items? (Show all of your calculations on the calculation sheet at the end of Part 3.)

ANSWERS AND CALCULATIONS FOR PART 3

Show all work for Part 3 here.

Answer to Question 35: _____

Show all calculations to determine the demand load for Question 35:

_____

_____

Answer to Question 36: _____

Show all calculations to determine the wire size for Question 36:

_____

_____

Answer to Question 37: _____

Show all calculations to determine the demand load for Question 37:

_____

_____

Answer to Question 38: _____

Show all calculations to determine the wire size for Question 38:

_____

_____

Answer to Question 39: _____

Show all calculations to determine the demand load for Question 39:

_____

_____

PART 4: DETERMINING RECEPTACLE LOCATIONS

In this exercise, you'll evaluate the floor plan for general living space in a typical home and determine the proper locations for the electrical outlets in the room. The *NEC* covers not only the electrical wiring of devices, but also (in many cases) the proper location for each device.

Look at the living room shown in Figure 7. Imagine that you want to install in this room the minimum number of outlets required by the *NEC*. To complete the exercise, you'll need to determine the minimum number of outlets needed for this room, and indicate the correct location where they should be installed in the room. You'll mark the location of the outlets directly on Figure 7 in your project booklet.

To receive full credit for this exercise, you'll need to do the following four things:

1. Indicate the location of each outlet in the figure by using the appropriate symbol
2. Indicate the distance that the outlet should be placed along the adjoining wall
3. Show how the branch circuit(s) would be connected
4. Indicate the proper spacing between outlets to meet *NEC* code requirements

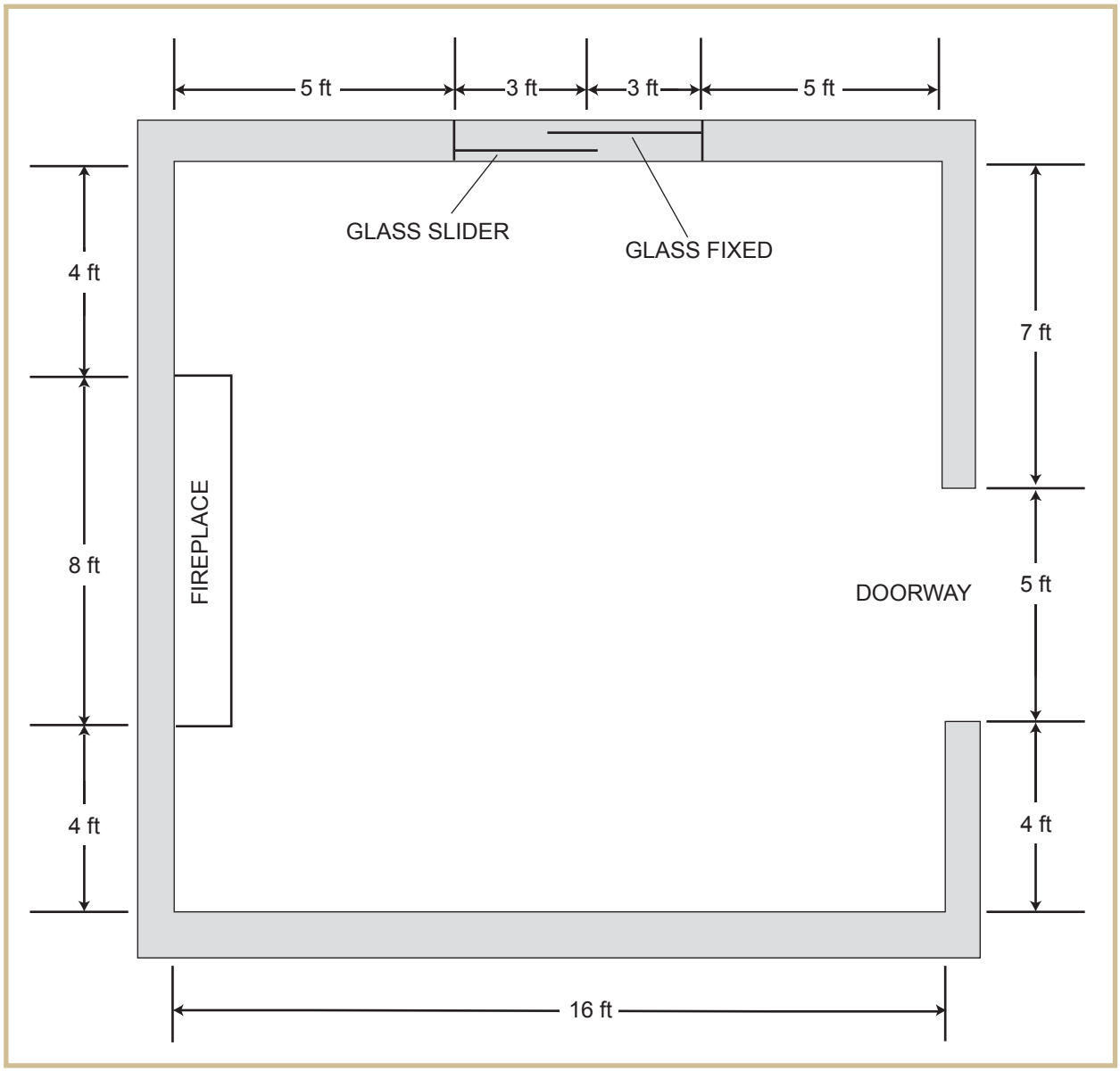

FIGURE 7—Mark this diagram with receptacle locations and symbols.

Keep in mind that there are several different ways that this job can be done correctly. However, remember that you're trying to install the minimum number of outlets. Therefore, you may have to try several different patterns to determine which configuration uses the minimum number of outlets. (Try sketching your ideas on scrap paper first; then, mark your final answers directly on Figure 7.)

PART 5: *NEC* CODE VIOLATIONS

Part 5 of your *NEC* project will be similar to previous exercises in that you'll be asked to evaluate simple electrical wiring diagrams. However, these diagrams will contain *NEC* violations. It will be your job to locate and identify the code violations.

For example, suppose that you're looking at a kitchen wiring diagram and notice that GFCI outlets weren't placed near the sink. Well, the *NEC* requires that any outlet near water must be fitted with a GFCI outlet for protection from electrical shock. For the exercise, you would recognize that this installation violates the *NEC*; you would then describe the violation and reference the article or section of the *NEC* that supports your answer.

The best approach to completing this exercise is to look over the illustrations in the project very carefully, paying attention to each and every detail. Then, use your knowledge of the *NEC* to check each circuit shown. Checking each circuit in an organized manner is the fastest and easiest way to complete the project.

Now, you're ready to begin this part of your project. Carefully study the wiring diagrams shown in Figures 8 through 12. *At least one NEC* violation is shown in each diagram. Identify each violation, and then describe the violation in Table 2. You'll also need to indicate which article of the *NEC* is involved in the violation.

To be sure that you understand how this exercise works, one example has been completed for you in the table. Figure 8 shows a typical residential bathroom. As you can see in the figure, the outlet receptacle next to the basin isn't GFCI protected. This is a violation of the *NEC*. (Article 210.8(A) (1) indicates that all electrical outlets in bathroom areas must have GFCI protection.) So, you would describe the problem as shown in the first line of Table 2.

Question 40: Review the figures, note all *NEC* violations in each one, and determine which *NEC* article has been violated. Use this information to complete the remainder of Table 2.

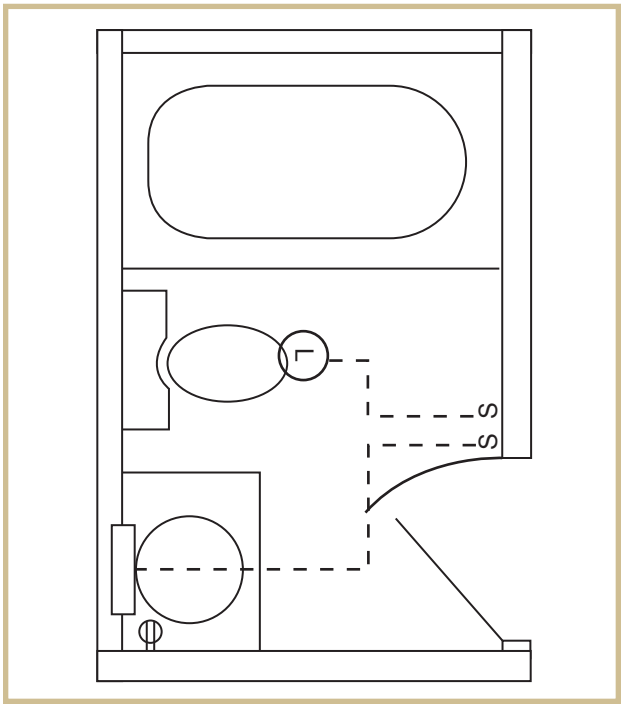

FIGURE 8—Note any* NEC *violations in Table 2.

Table 2

Figure Number	Description of the NEC Violation	NEC Article Violated
8	Outlet not GFCI protected	Article 210.8(A)(1)
9		
10		
11		
12		

FIGURE 9—Note any* NEC *violations in Table 2.

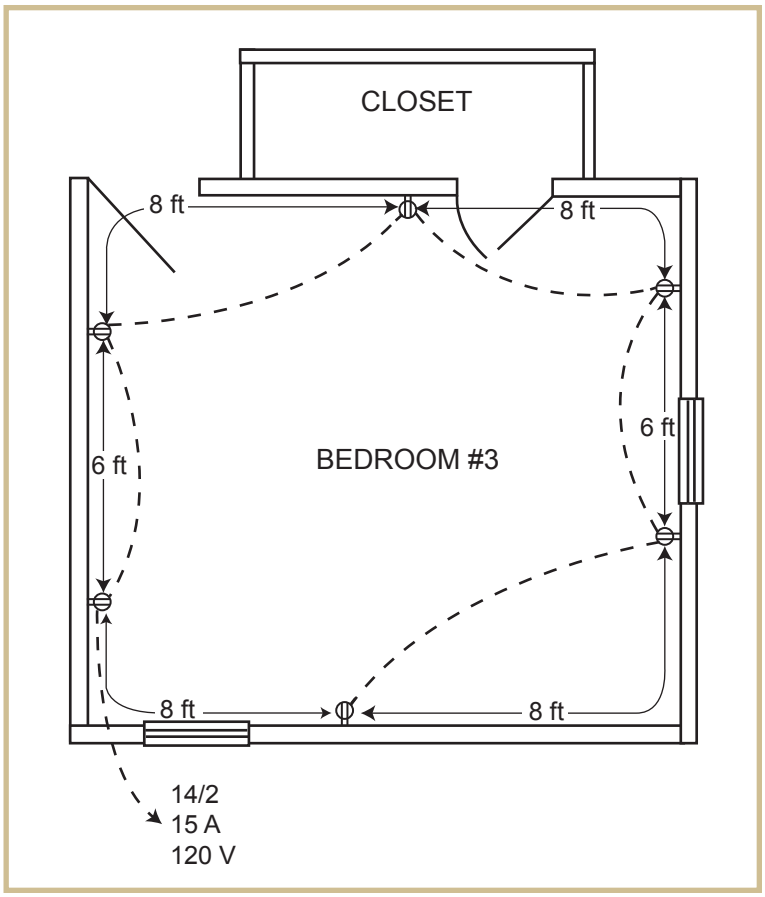

FIGURE 10—Note any* NEC *violations in Table 2.

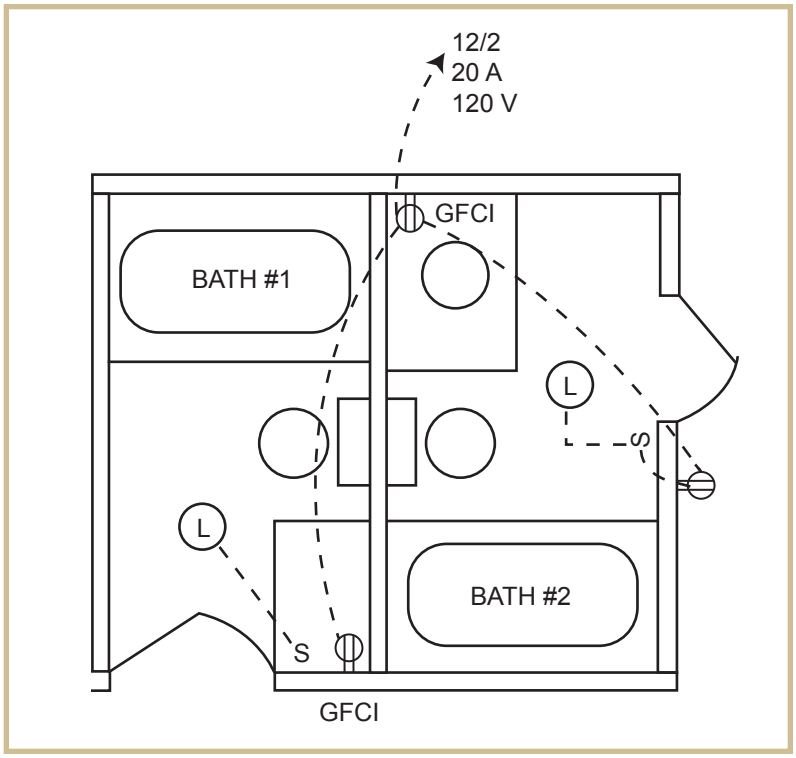

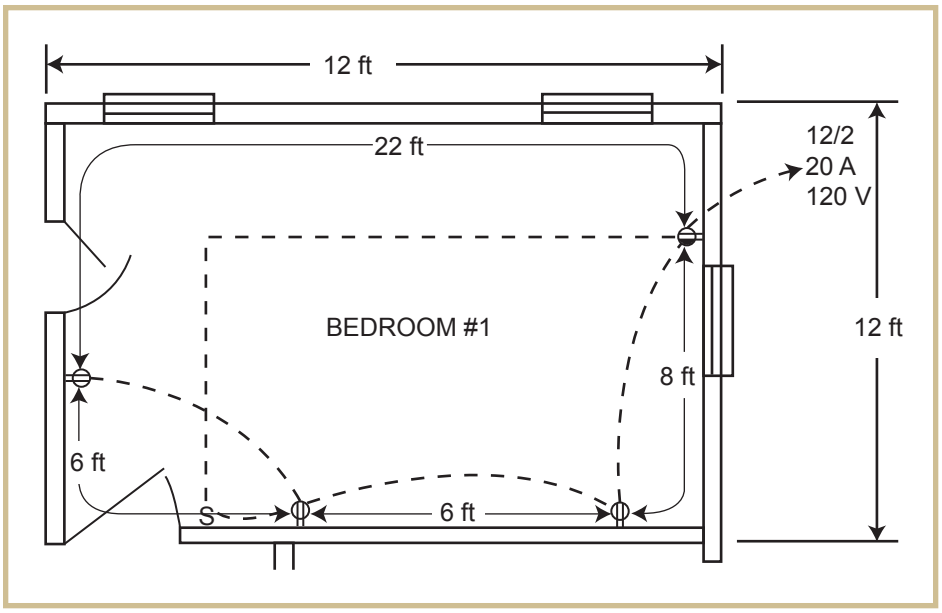

FIGURE 11—Note any* NEC *violations in Table 2.

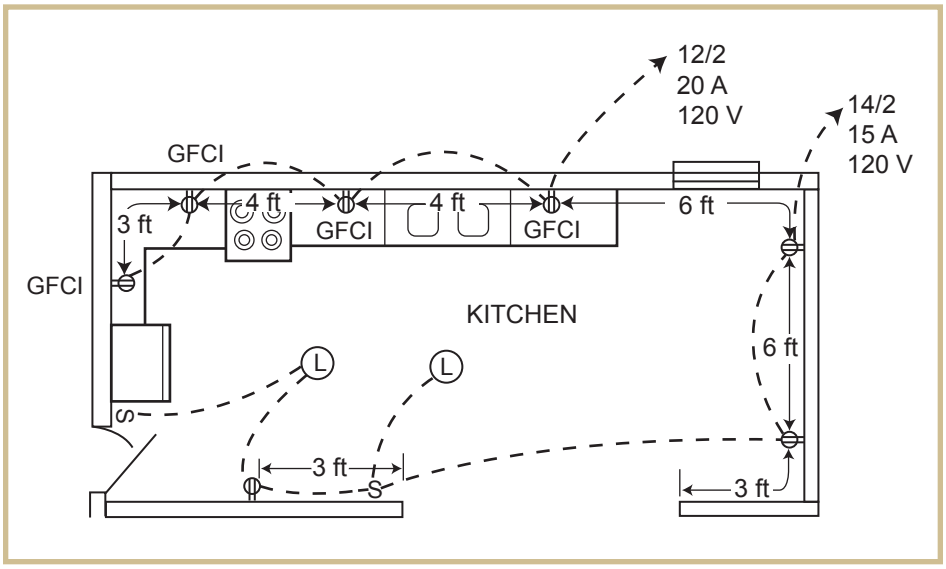

FIGURE 12—Note any* NEC *violations in Table 2.

SUBMITTING YOUR WORK

Mail-In

To mail-in your project, once you've completed all parts of this project and answered all of the questions, *fill out your name and student number on the Answer Sheet on the following page.* Then, using the address provided on the Answer Sheet, mail the entire lesson booklet to the school.

Be sure to keep a copy of your completed assignment!

Online

You can also submit your graded project online:

1. On your computer, save a revised and corrected version of your project. Be sure to include your student number and exam number on your saved documents.
2. Go to **http://www.pennfoster.edu** and log in.
3. Go to your **student portal.**
4. Click on **Take Exam** next to the lesson you're working on.
5. Enter your email address in the box provided. (*Note:* This information is required for online submission.)
6. Attach your file as follows:
   a. Click on the **Browse** box.
   b. Locate the file you wish to attach.
   c. Double-click on the file.
   d. Click on **Upload File.**
   e. Repeat these steps for all documents.
7. Click on **Submit Files.**

ANSWER SHEET

FOR YOUR INSTRUCTOR'S USE	
GRADE	GRADED BY

EXAMINATION NUMBER **00683100**

National Electrical Code

Graded Project

STUDENT NUMBER: _____

PLEASE PRINT

NAME _____

ADDRESS _____

CITY _____

STATE/PROVINCE **ZIP/POSTAL CODE**

☐ **Check if this is a new address**

PHONE _____ — _____

CUT ALONG THIS LINE

Graded Project
National Electrical Code
Answer Sheet

Grading Criteria

Your answers will be graded on the following criteria.

Questions 1–40 (80 pts.) _____

Question 11 (5 pts.) _____

Figure 7 (10 pts.) _____

Question 40 (5 pts.) _____

Total Score _____

When you've completed the exercises in this project booklet, fill out the top of this Answer Sheet. Then mail the entire booklet (including this Answer Sheet) to

Penn Foster
Student Service Center
925 Oak Street
Scranton, PA 18515
Attention: Education Department, Electrician Project

Comments _____

_____

_____

_____