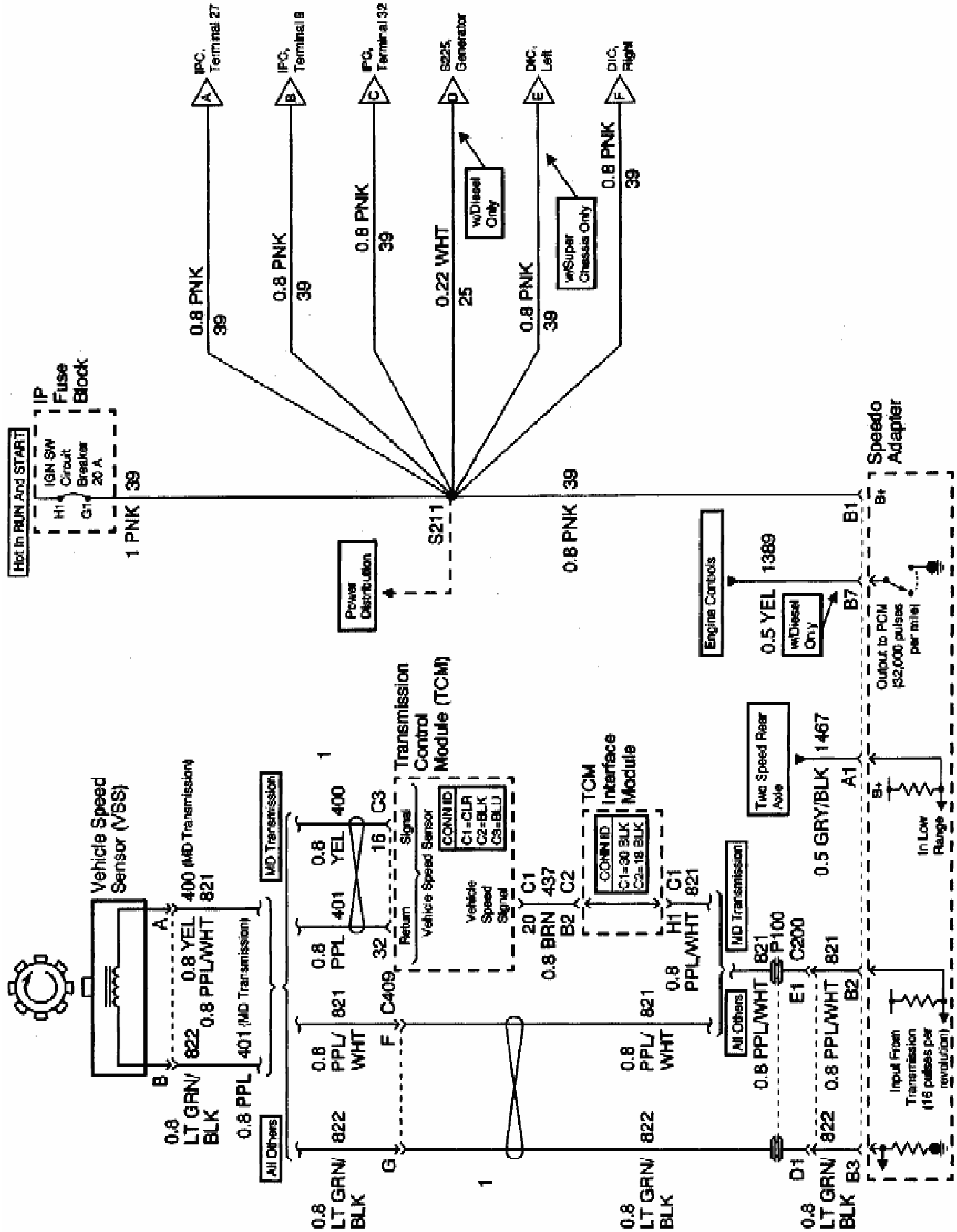

Instrument Cluster (Part 1 of 7)

Chevrolet & GMC
C-Series (2000-05)

Heavy Truck Service 2011-Copyright 2011 Hearst Business Media. All Rights Reserved.

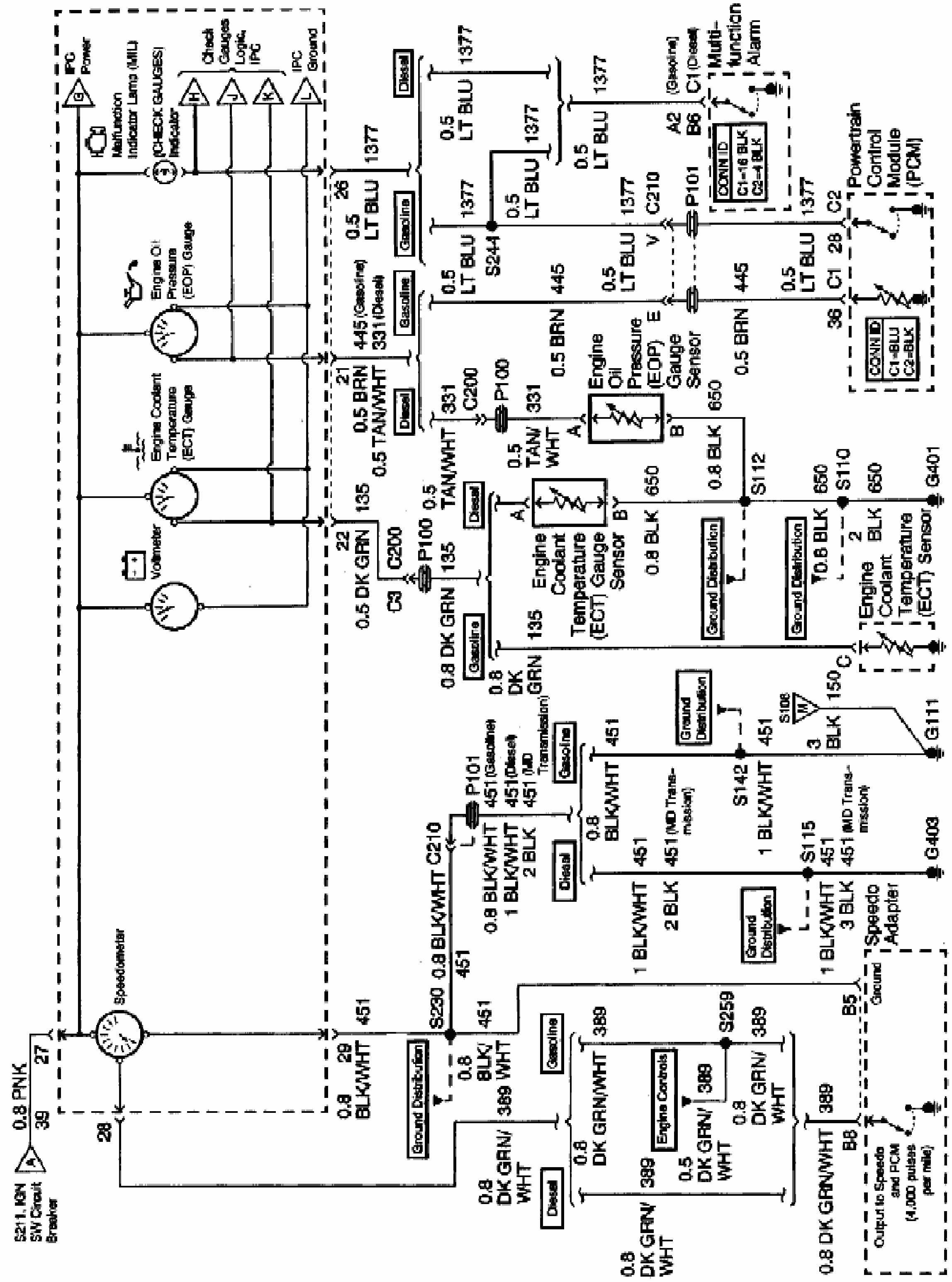

Instrument Cluster (Part 2 of 7)

Chevrolet & GMC
C-Series (2000-05)

Heavy Truck Service 2011-Copyright 2011 Hearst Business Media. All Rights Reserved.

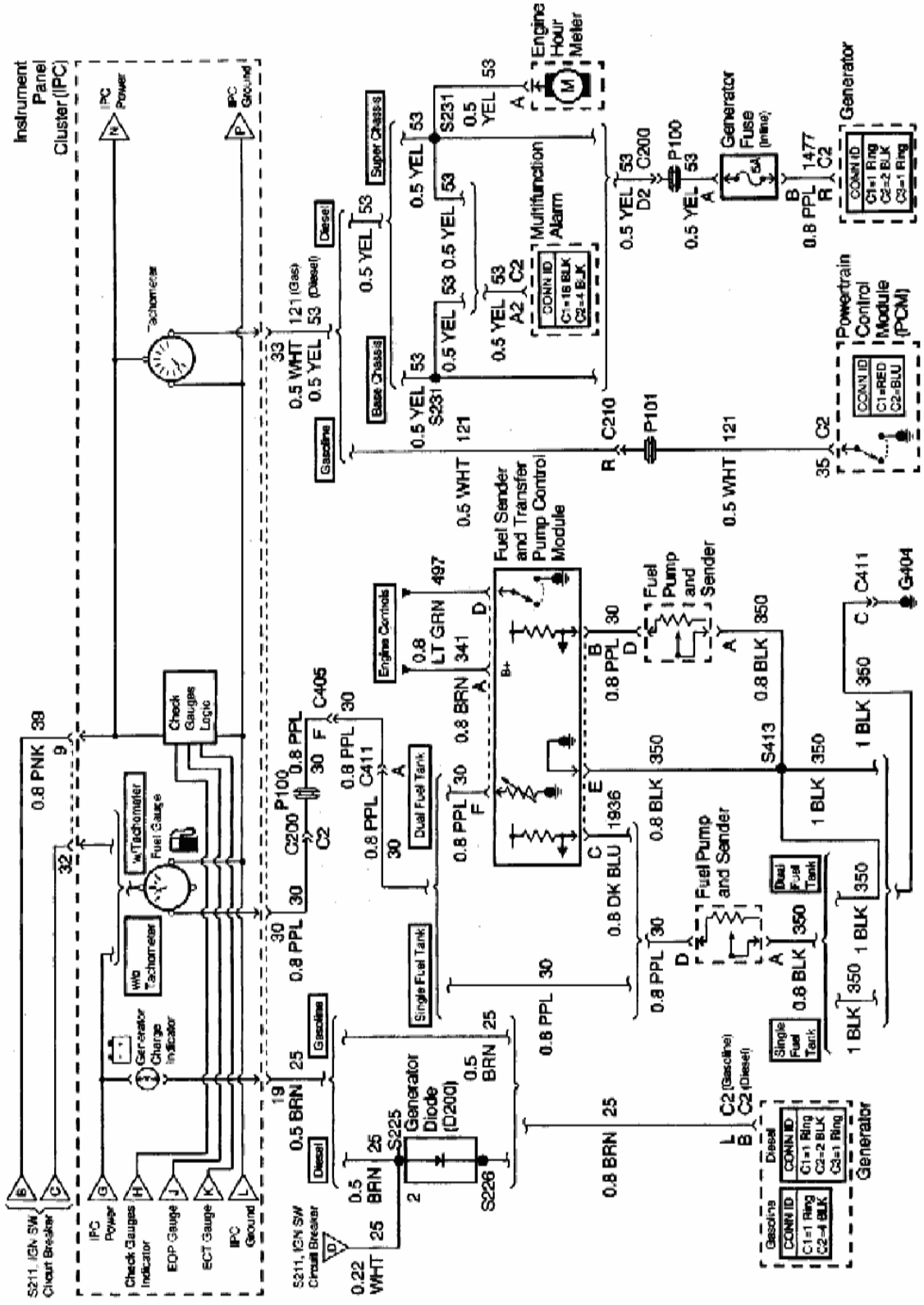

Instrument Cluster (Part 3 of 7)

Chevrolet & GMC
C-Series (2000-05)

Heavy Truck Service 2011-Copyright 2011 Hearst Business Media. All Rights Reserved.

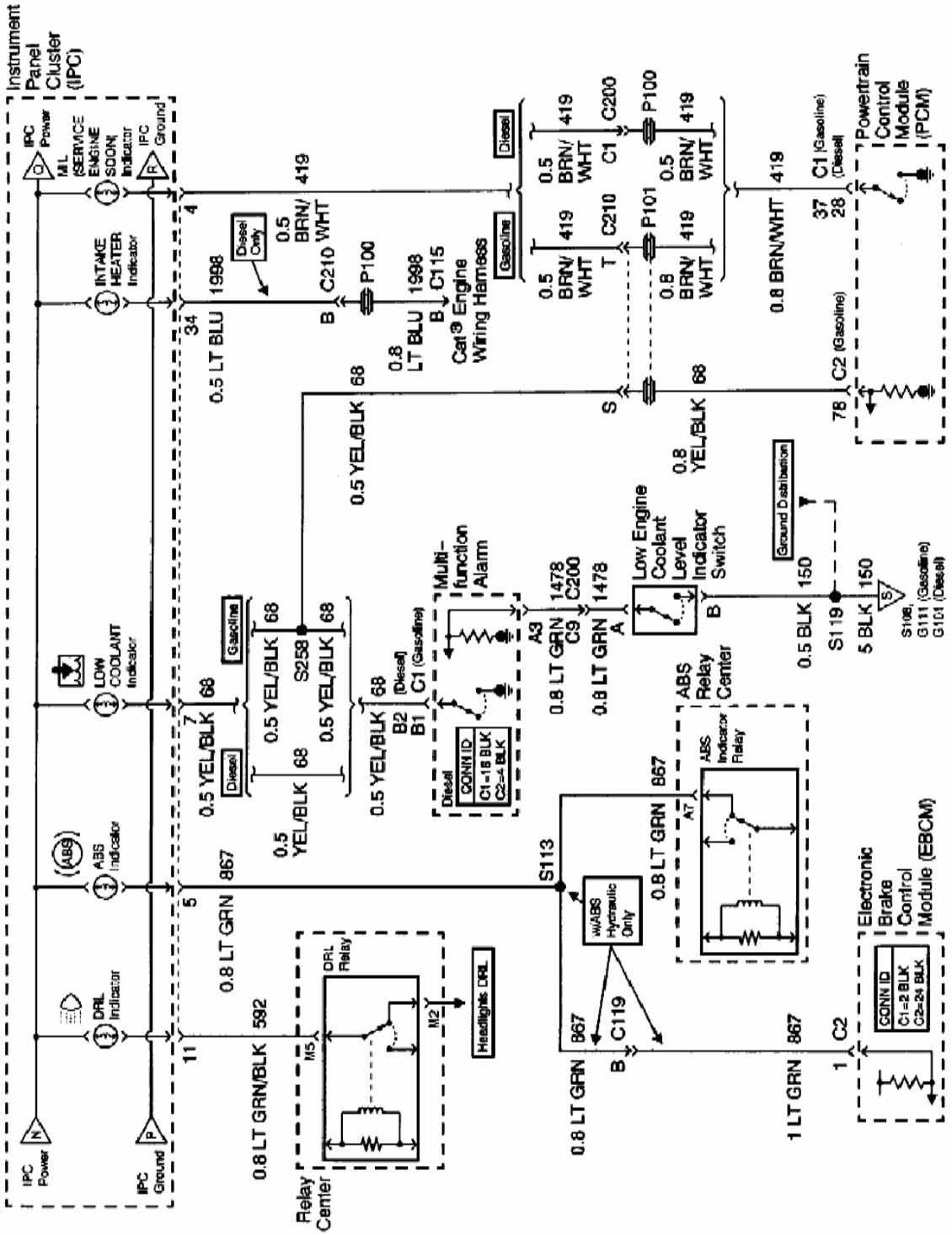

Instrument Cluster (Part 4 of 7)

Chevrolet & GMC
C-Series (2000-05)

Heavy Truck Service 2011-Copyright 2011 Hearst Business Media. All Rights Reserved.

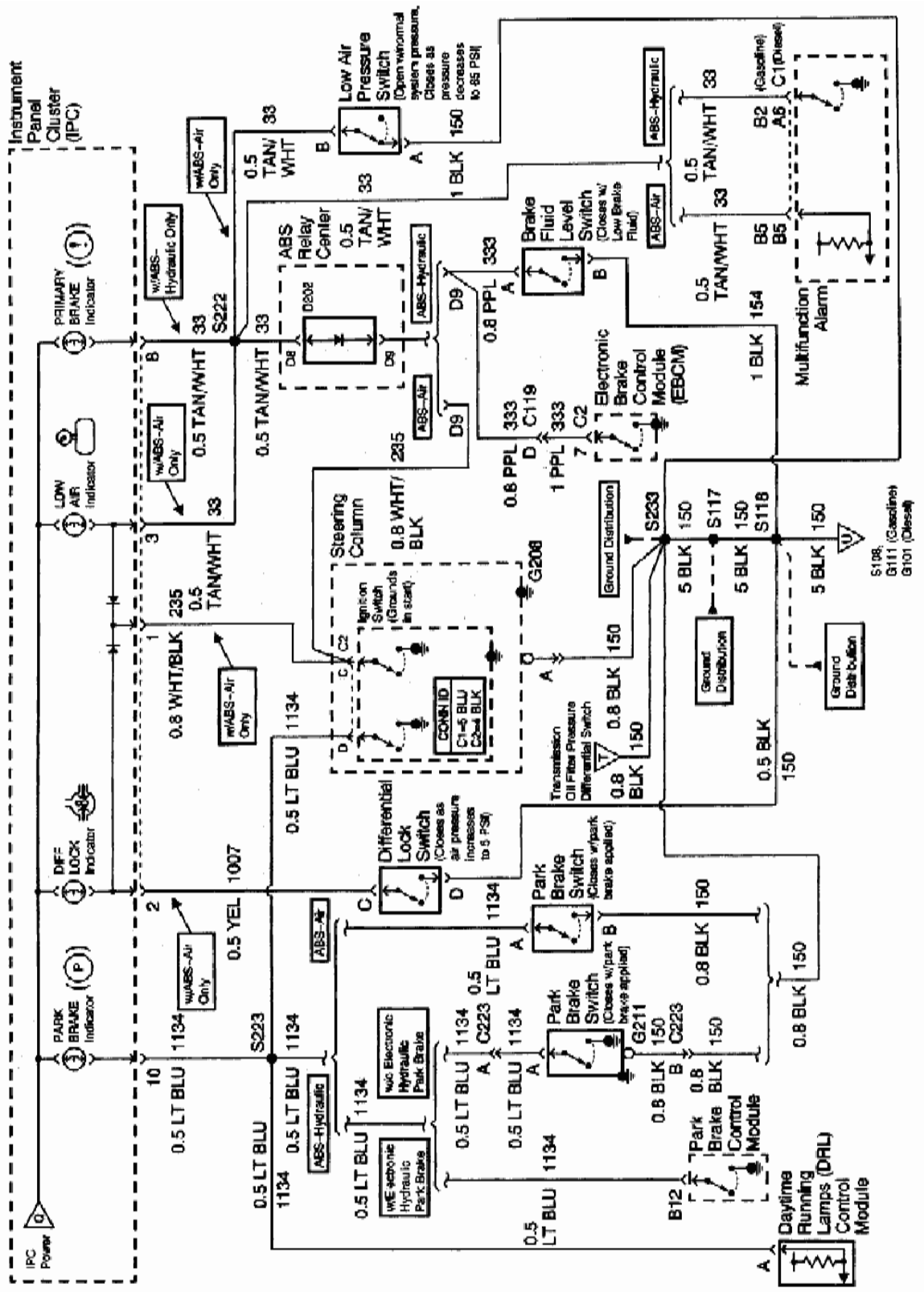

Instrument Cluster (Part 5 of 7)

Chevrolet & GMC
C-Series (2000-05)

Heavy Truck Service 2011-Copyright 2011 Hearst Business Media. All Rights Reserved.

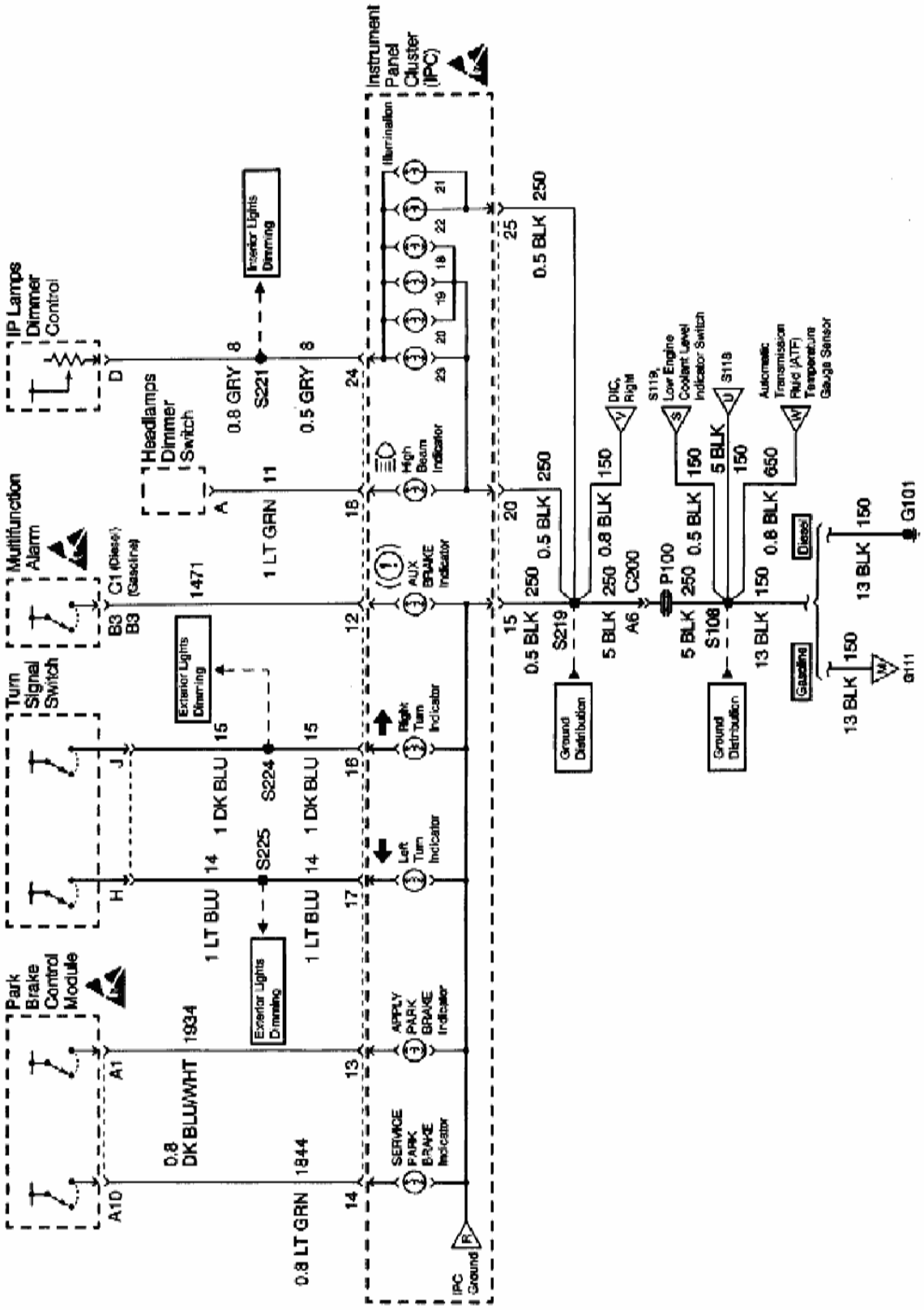

Instrument Cluster (Part 6 of 7)

Chevrolet & GMC
C-Series (2000-05)

Heavy Truck Service 2011-Copyright 2011 Hearst Business Media. All Rights Reserved.

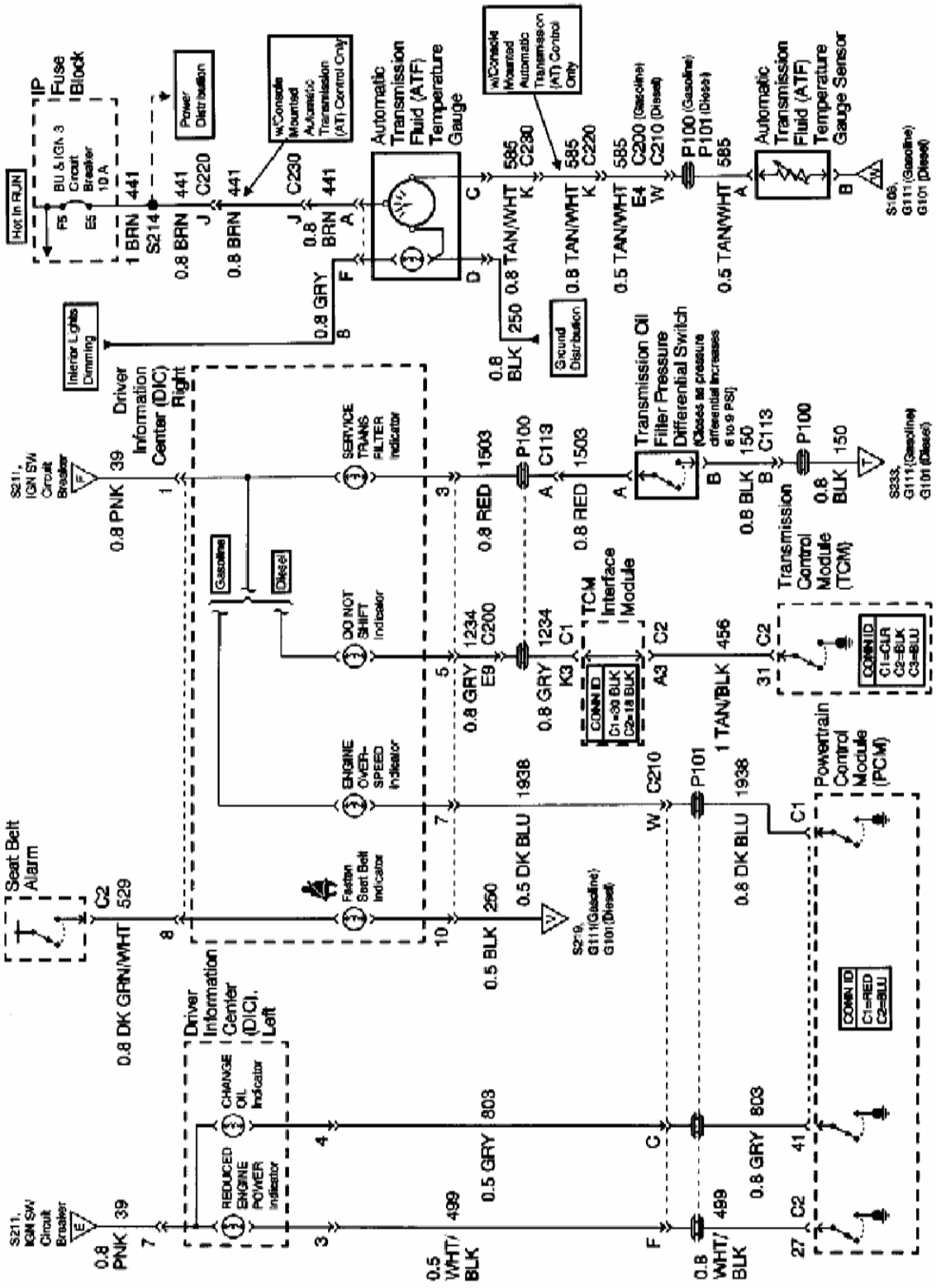

Instrument Cluster (Part 7 of 7)

Chevrolet & GMC
C-Series (2000-05)

Heavy Truck Service 2011-Copyright 2011 Hearst Business Media. All Rights Reserved.