Radiator, Cooling Fan and Shroud

Special Tool(s)

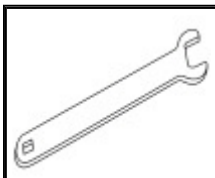 ST1500-A	Wrench, Fan Clutch Nut 303-240 (T84T-6312-D)
ST2133-A	Holding Wrench, Fan Pulley 303-239 (T84T-6312-C)
ST2591-A	Disconnect Tool, Transmission Cooler Line 307-441

Material

Item	Specification
Motorcraft Premium Gold Engine Coolant VC-7A (in Oregon, VC-7B)	WSS-M97B51-A1

Removal and Installation

1. If removing the radiator, drain the engine cooling system. For additional information, refer to Cooling System Draining, Filling and Bleeding in this section.

2. **NOTE:** *Vehicles with 4.6L engine.*

   Remove the air cleaner assembly. For additional information, refer to Section 303-04A.

3. **NOTE:** *Vehicles with 5.4L (3V) engine.*

   Remove the air cleaner inlet pipe and resonator. For additional information, refer to Section 303-04B.

4. **NOTE:** *All vehicles.*

   Remove the pin-type retainers and the air deflector cover.

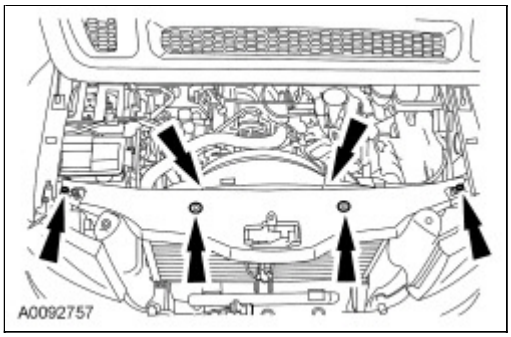

5. Detach the battery cable harness from the radiator shroud.

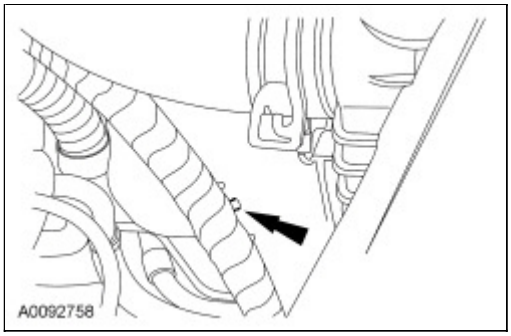

6. Remove the parts in the order indicated in the following illustration and table.

To remove individual parts, only carry out the listed steps:

Part	Steps
Cooling fan and shroud	1-3
Radiator	1-14

Item	Part Number	Description
1	8A616	Cooling fan assembly Removal Note Installation Note
2	N807658	Radiator shroud bolts (2 req'd)
3	8146	Radiator shroud Removal Note Installation Note
4	15161	Upper radiator hose clamp
5	8B274	Upper radiator hose (position aside)
6	W527352	Upper degas bottle hose clamp
7	8W005	Upper degas bottle hose (position aside)
8	15161	Lower radiator hose clamp
9	8B273	Lower radiator hose (position aside)

10	7A031	Transmission cooler lines Removal Note
11	N606689	Radiator support bracket bolts (2 req'd)
12	8B359	Radiator support bracket (2 req'd)
13	8B204	Upper radiator insulators (2 req'd)
14	8005	Radiator
15	8B204	Lower radiator insulators (2 req'd)

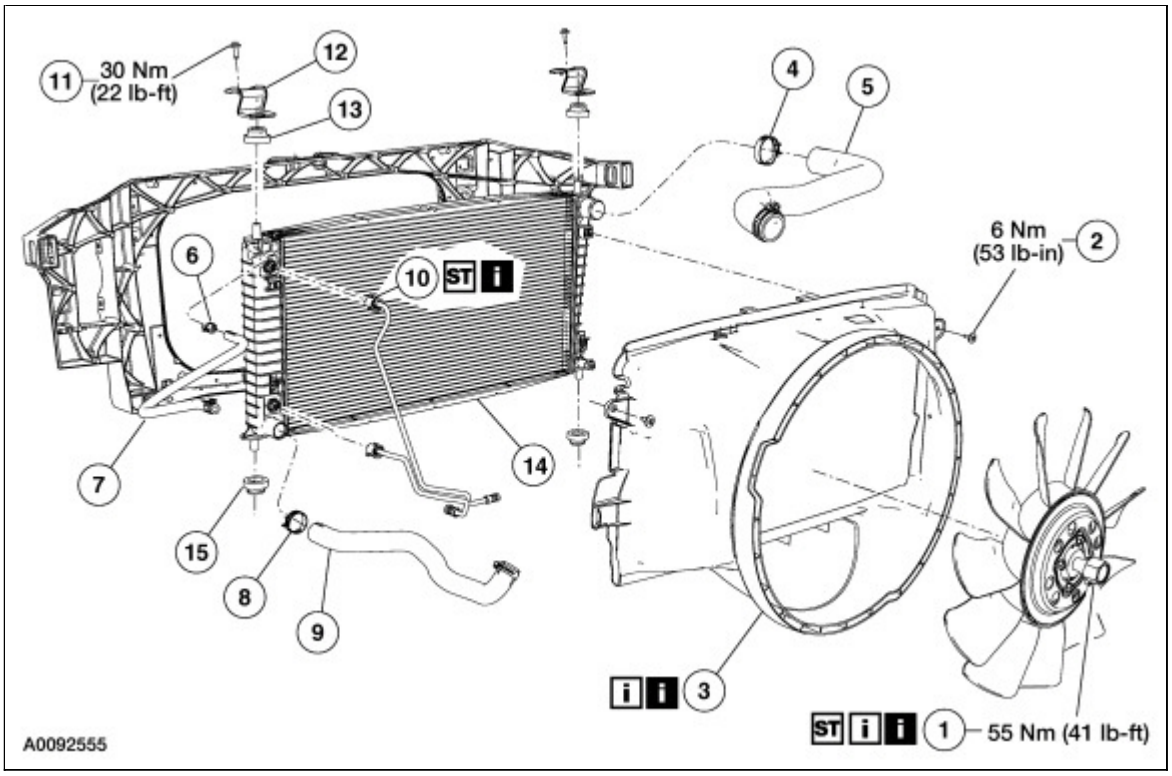

7. To install, reverse the removal procedure.

8. Fill and bleed the cooling system. For additional information, refer to Cooling System Draining, Filling and Bleeding in this section.

Item 1: Cooling Fan Assembly Removal Note

1. Using the special tools, remove the cooling fan assembly.

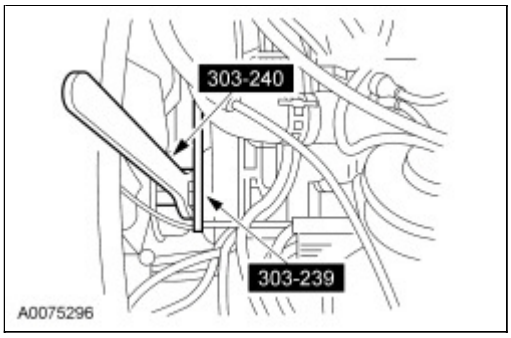

2. Position the cooling fan assembly into the radiator shroud.

Item 3: Radiator Shroud Removal Note

1. **NOTE:** *Step 1 is for vehicles with 5.4L (3V) engine only.*

   Remove the two nuts and the air cleaner bracket.

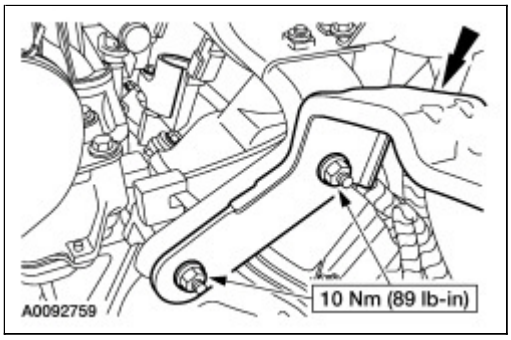

2. Remove the cooling fan assembly with the radiator shroud.

Item 10: Transmission Cooler Lines Removal Note

1. Push the special tool into the fitting to release the tube retaining clip and remove the transmission cooler lines.

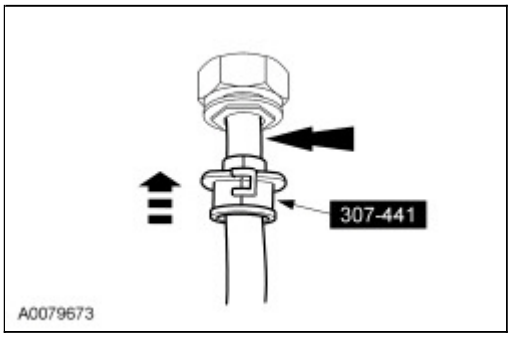

Item 3: Radiator Shroud Installation Note

1. Position the cooling fan assembly into the radiator shroud.

Item 1: Cooling Fan Assembly Installation Note

1. Using the special tools, install the cooling fan assembly.

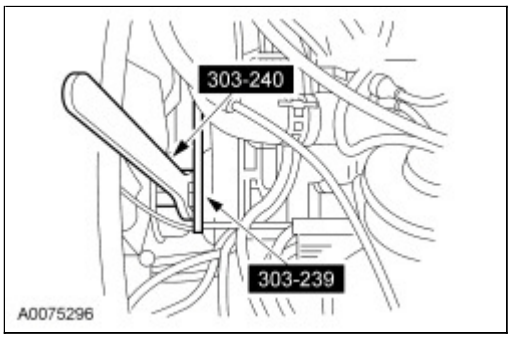

Copyright © 2015 Ford Motor Company