Connector Faces/Pinout Charts, C224 (150-49)

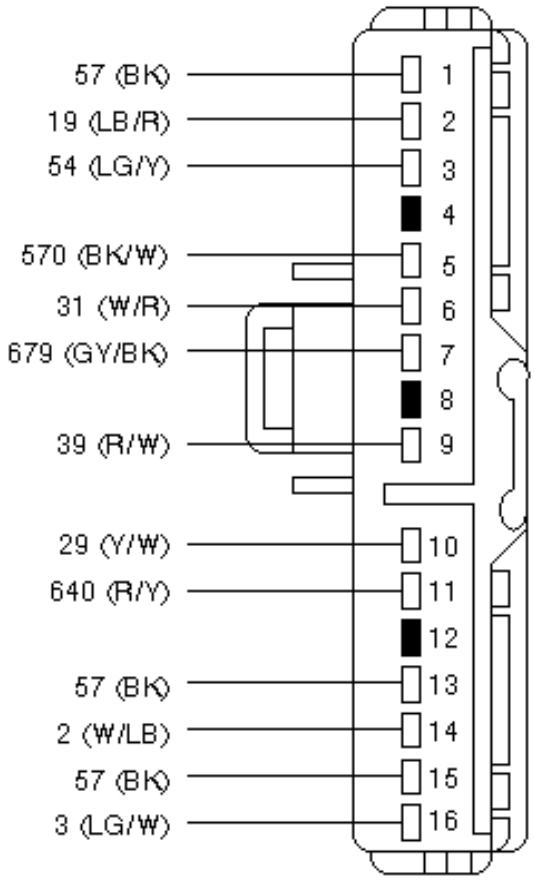

C224

INSTRUMENT CLUSTER

PIN	CIRCUIT	CIRCUIT FUNCTION
1	57 (BK)	Ground
2	19 (LB/R)	Dimmer to Illumination Lamps (POS)
3	54 (LG/Y)	B+ to Interior Lamp
4	–	NOT USED
5	570 (BK/W)	Ground
6	31 (W/R)	Oil Pressure Signal
7	679 (GY/BK)	Vehicle Speed Signal
8	–	NOT USED
9	39 (R/W)	Temperature Signal
10	29 (Y/W)	Fuel Level Signal
11	640 (R/Y)	Ignition (Hot in Start or Run)
12	–	NOT USED
13	57 (BK)	Ground
14	2 (W/LB)	Turn Signal Switch (POS)
15	57 (BK)	Ground
16	3 (LG/W)	Turn Signal Switch (POS)