Fuel Filter: Service and Repair

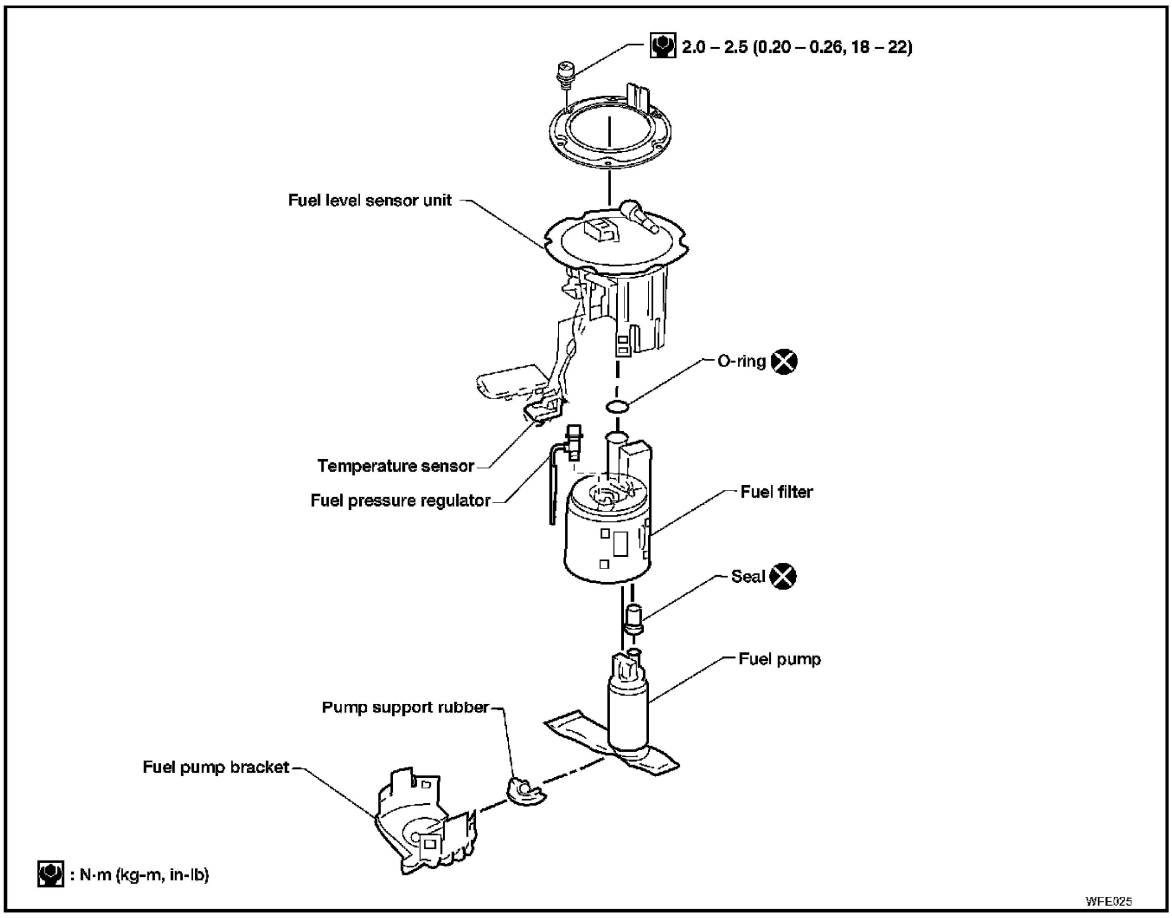

Removal and Installation

1. Release the fuel pressure from the fuel line.
   Refer to "FUEL PRESSURE RELEASE" [QG18DE (ULEV)], "FUEL PRESSURE RELEASE" [QG18DE (SULEV)], "FUEL PRESSURE RELEASE" (QR25DE).
2. Disconnect the battery ground cable.
3. Open the fuel filler lid and filler cap.
4. Remove the rear seat cushion. Refer to Seats; "Removal and Installation".

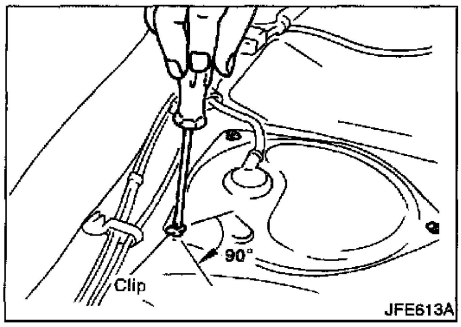

5. Remove the inspection hole cover located under the rear seat cushion.

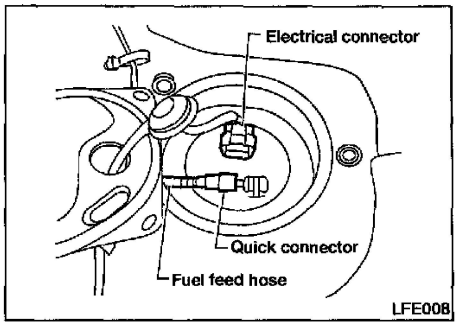

6. Disconnect the fuel pump assembly electrical connector.

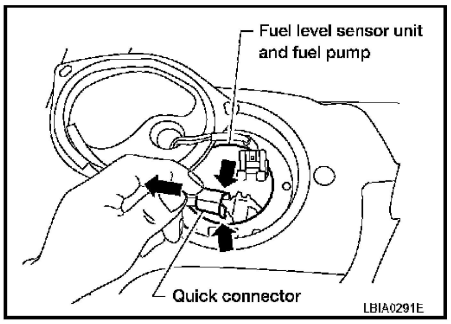

7. Disconnect the fuel feed hose quick connector as follows:
   a. Align the mating marks on the fuel pump outlet and the quick connector.
   b. Hold the quick connector and push in the tabs, then pull out from the fuel pump outlet that is inserted in the quick connector.

   CAUTION:
   - The quick connector can be removed when the tabs are completely depressed. Do not twist the fuel hose more than necessary.
   - Do not use any tools to remove the quick connector.

8. Remove the six retainer ring screws.

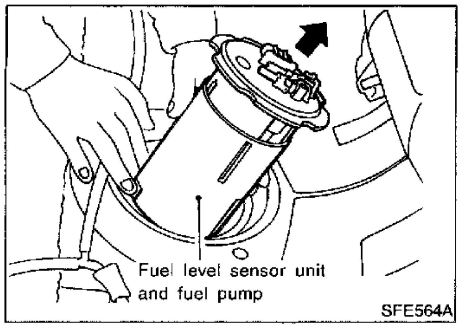

9. To remove, pull up on the fuel level sensor unit and fuel pump.

   CAUTION: Do not damage the arm of the fuel level sensor and fuel tank temperature sensor when removing.

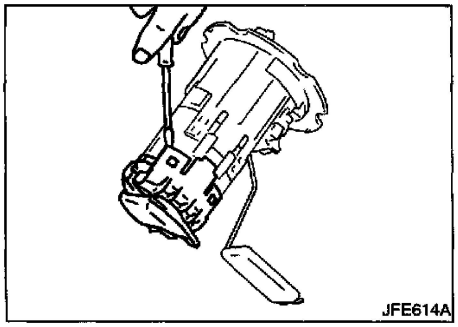

10. Remove the fuel pump as shown in the figure.
    - Apply mating marks on the fuel pump and fuel filter for proper alignment for installation.

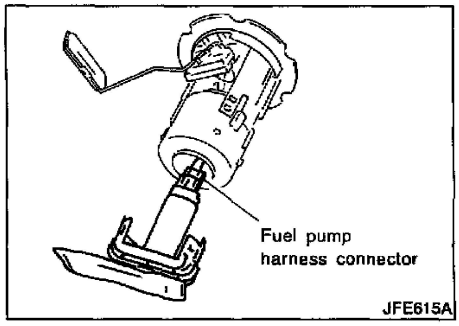

11. Disconnect the fuel pump harness connector.

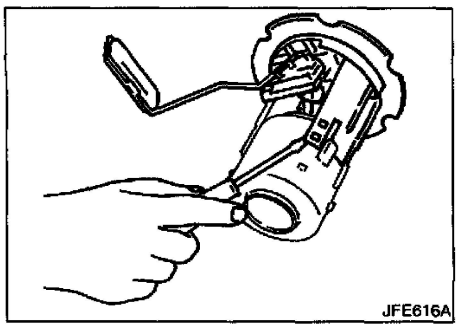

12. Remove the fuel filter from fuel level sensor unit as shown.
    - Apply mating marks on fuel filter and fuel level sensor unit for proper alignment for installation.

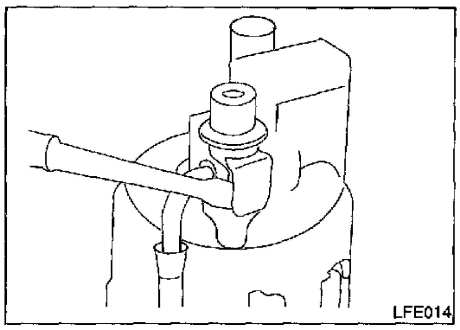

13. Remove the fuel pressure regulator from the fuel filter, if necessary.

INSTALLATION

Installation is in reverse order of removal.
Connect the quick connector as follows:

1. Align the mating marks on the fuel pump outlet and quick connector for installation.

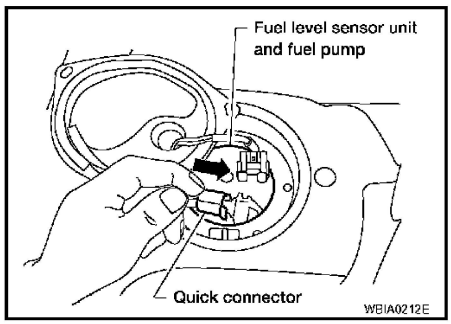

2. Align the push tabs with the quick connector slots.

3. Insert the fuel pump outlet into the center of the quick connector until you hear a click.

After connecting the quick connector make sure the connection is fully seated as follows:

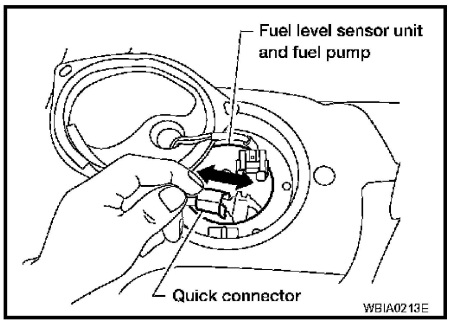

1. Pull on the quick connector to make sure it is firmly connected.
2. Apply fuel pressure to the fuel lines by turning the ignition switch ON (without starting the engine). Then check for fuel leaks at the connections
3. Start the engine and increase the engine speed, verify there are no fuel leaks.