Study Unit

Hydraulic Power System Troubleshooting

By

Thomas F. Gregory

You've studied many individual hydraulic components. These components are the building blocks of hydraulic systems. In this unit you'll see how the components you've studied and others make up a machine designed to accomplish a task. Hydraulic-powered and hydraulic-controlled machines are used in so many businesses and industries that it's impossible to list them all. Hydraulic machines can be used to lift, position, hold, move, and press many different parts or materials. Many hydraulic systems contain other control and sensing devices and subsystems such as pneumatic, electric, or electronic components. To properly maintain and troubleshoot hydraulic power systems, you must be familiar with how all of the various components interact to make a useful machine.

When you complete this study unit, you'll be able to

- Understand and explain the function of the hydraulic components that make up a complete system
- Calculate the required size of components such as cylinders and motors
- List the procedures needed to maintain hydraulic systems
- Recognize the electrical devices that interface with hydraulic components
- Analyze and troubleshoot hydraulic-system failures

ONLINE RESOURCES

Remember to check your student portal regularly. Your instructor may post additional resources that you can access to enhance your learning experience.

Preview

Contents

Hydraulic Power System Troubleshooting

A WALK THROUGH A HYDRAULIC SYSTEM

Hydraulic systems are present in many different types of machinery. It's difficult to think of a manufacturing plant that doesn't contain at least one hydraulic-powered machine. Pieces of mobile equipment such as loaders, graders, bulldozers, and fork lifts also use hydraulic power efficiently and effectively. Virtually all such mobile equipment relies on hydraulic power because of the ease of control and high levels of output power available for the relatively small space required. Some equipment requires complex hydraulic circuits because of the variety of functions performed, while other machines have simple power and control circuits to serve a basic hydraulic function such as lifting or holding. Figure 1 shows a typical loader used for moderately heavy earth-moving work at a construction site. The harsh environment in which construction and some industrial equipment operates makes designing and maintaining these fluid power systems a challenge. Hydraulic power systems must produce maximum force while operating reliably and accurately for many continuous hours.

Figure 2 shows a loader's hydraulic circuit diagram. This specific type of loader is known as a backhoe. One could classify this circuit as having intermediate complexity. Notice that the drawing itself closely resembles an electrical schematic. There are many similarities between electrical and hydraulic circuits.

FIGURE 1—This loader is typical of mobile equipment that uses hydraulic power systems.

The circuit in Figure 2 is one we'll consider in much depth. First, however, it may be helpful for you to see exactly what type of mechanical components correspond to the schematic symbols. Figure 3 shows the controls typically found on a backhoe. The backhoe operator uses these hand-controls to regulate the flow of hydraulic fluid to the machine's various hydraulic-power systems and actuators (Figure 4).

The circuit in Figure 2 represents the hydraulic system that powers the boom, bucket, actuators, and controls typically found in backhoes. In Figure 1, you see that the bucket is mounted on the front of the loader while the boom is in this case fitted with a demolition tool. Many of the actuators operate in parallel to equally distribute their forces. This effectively multiplies the amount of force that one actuator is capable of supplying. Another pairing of actuators, known as *swing cylinders*, are connected so that one cylinder extends while the other retracts. In this way, two cylinders share the load.

Let's look at the function of the loader circuit in more detail. This is a specific example about a piece of mobile equipment. However, you should realize that the hydraulic components, the system's design, and its operating principles are similar to

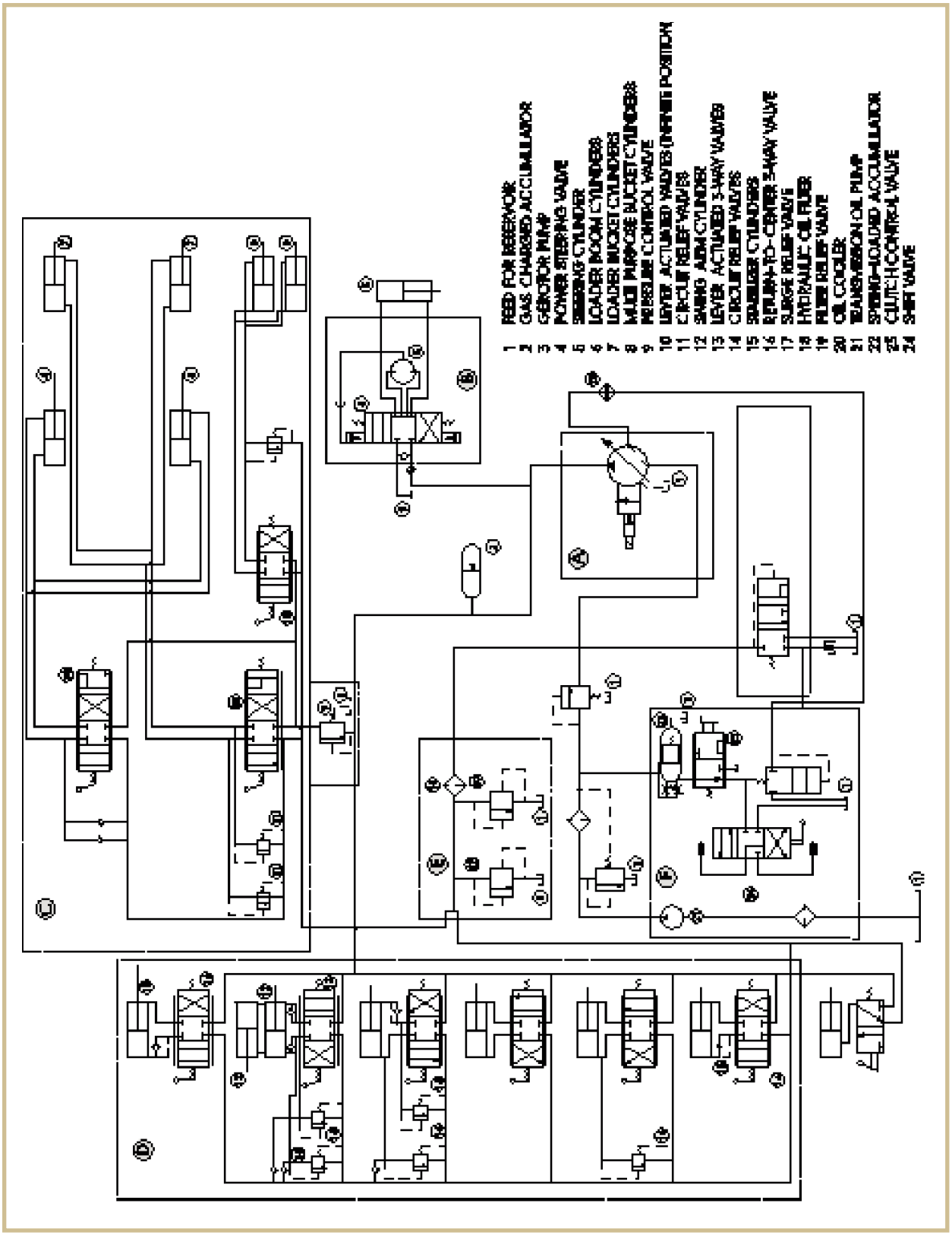

FIGURE 2—This schematic represents a backhoe's hydraulic power system. It shows the operation and layout of the circuit in graphic form. This circuit is comparable to a moderately complex industrial one.

FIGURE 3—Control levers are connected to directional control valves that operate the backhoe's actuators.

most other mobile or industrial hydraulic equipment. When the number of components and operations cause circuits to grow more complex, it's helpful to break the circuit down into smaller, more understandable subsystems. We can do this by examining the areas noted in Figure 2 and labeled as *A*, *B*, *C*, *D*, and *E*. By looking at the function of each area individually, we can see how each subsystem contributes to the operation of the whole machine. It's also common to draw dotted lines around all equipment located in the same subassembly. We'll begin examining this schematic by noting that the components marked *1* represent the backhoe's reservoir. The schematic doesn't show the piping back to the reservoir.

FIGURE 4—Actuators, such as the hydraulic cylinder connected to this loader's bucket, convert fluid energy to mechanical power.

Instead, when a component is connected to the reservoir, a short line is drawn from that component's symbol to the symbol for the reservoir. Look at how often this notation is used in every area of the circuit. If you're unsure of the symbols used for the other components, refer to your earlier studies of hydraulic symbols.

Section A of Figure 2 represents the main hydraulic pump system. In this case, a diesel motor, which isn't shown, turns the pump. As you know, the arrow drawn across the pump symbol indicates that it has a variable displacement. The small notation on the left side of the pump symbol indicates how it's controlled. In this case, a stroke-control valve is used. From its symbol you can tell that this valve is solenoid controlled, pilot pressure operated, and has a pressure compensator. The pump system supplies high-pressure

fluid to the working areas of the circuit, Sections C and D, and also to a gas-charged *accumulator*, marked with a *2* in Figure 2. In the event that the pump can't meet the fluid-flow requirements of many actuators working at the same time, the accumulator supplies fluid, at a specific pressure, to all parts of the system. During an off-peak part of the work cycle, the system recharges the accumulator. Figure 2 shows the two main functional areas of the backhoe: Section C, the loader section, and Section D, the boom and bucket section.

Section B of the schematic in Figure 2 represents the backhoe's power steering system. A *gerotor pump 3* controls a power steering valve *4*, which in turn controls a steering cylinder *5*. A gerotor is a very simple type of pump with only two moving parts. In this case, the steering wheel is the mechanical input to the pump shaft. Turning the wheel generates pressure within the gerotor. The direction of rotation of the steering wheel, connected to the gerotor, controls which way the control valve moves. The control valve position determines which way the cylinder travels. Note that the power steering cylinder is a double-acting type.

Section C is the loader section of the backhoe and contains two loader boom cylinders *6*, two loader bucket cylinders *7*, and two multipurpose bucket cylinders *8*. In many applications cylinders are installed in pairs to avoid the twisting forces a singly-supported bucket will transfer to the equipment during operation. A pressure control valve *9*, which also functions as a sequence valve, provides hydraulic power to this section. None of the loader operations can occur unless the pressure in the supply line is maintained at a set value. The controls for the various loader functions are return-to-center spring-loaded, lever-actuated valves, indicated with a *10* in Figure 2. Notice that these control symbols differ slightly from those you usually see. The extra lines above and below the control symbol mean that the control is an *infinite-position* type.

This means the operator can position the lever anywhere within the travel limits of the device. The lever isn't limited to certain preset positions. Also in Section C are two *circuit relief valves 11*, which guard against component damage resulting

from excessive pressure. There are seven relief valves used in this equipment. Figure 5 shows a photo of the loader used on this type of equipment.

FIGURE 5—Actuators are often located in pairs to balance forces and divide the load. An example is the pair of swing-arm cylinders located at the base of the boom.

Section D is the backhoe portion of the circuit, with boom and bucket controls. As mentioned before, the swing-arm cylinders *12* are double-acting types, connected so that they work opposite to each other's motion: as one extends, the other retracts. A lever-actuated three-way valve *13* and relief valves *14* control the swing arm. *Stabilizer cylinders* keep the backhoe upright as its load swings from side to side. Lever-actuated, spring return-to-center three-way valves *16* control the two stabilizer cylinders *15*.

Section E consists of a surge relief valve *17*, a hydraulic oil filter *18*, and a filter relief valve *19*. The filter relief valve

bypasses the filter to the reservoir in the event the filter becomes clogged. All of the circuit return lines from Sections C and D come back to the main hydraulic pump through Section E. Here they pass through an oil cooler 20 before returning to the reservoir.

Section F contains controls for the transmission. There's a transmission oil pump *21*, which supplies high-pressure fluid to a spring-loaded accumulator *22*, the foot-operated clutch control valve *23*, and the shift valve *24*. High-pressure oil is delivered to the clutch pack and brake pack as required by the operator.

This backhoe system is similar to many other types of equipment you'll encounter in the workplace. This example, however, doesn't contain any electrical controls or sensors that function as an integral part of the hydraulic system. If you work on hydraulic equipment, you'll probably have to become familiar with electrical circuitry and controls, and be able to analyze and troubleshoot complex hydraulic systems.

HYDRAULIC SYSTEM REQUIREMENTS

Industry relies on hydraulic-powered equipment because of its versatility and its ability to transmit a large amount of power compared to the relatively small size of the system. Hydraulic power is easily controlled and can be combined with electrical and computerized controls to make very powerful and complex machines.

A technician who designs, modifies, or maintains hydraulic systems must have a thorough knowledge of the physics of fluid power and a sound understanding of the mechanical components that make up a hydraulic system. The process of designing a simple hydraulic system is straightforward. First, the designer must understand what specific tasks the system will perform. The designer must then go through a series of steps that logically define the system specifications. We'll now highlight these steps briefly before discussing each in more detail.

Step 1: *Evaluate the type of motion required.* The first step in the design of a hydraulic system is to determine the characteristics of the load and the desired motion. Is the motion straight-line or rotary? If rotary, is the motion continuous, or only part of a full-circle rotation? Must the load be reversed? What are the forces and torque required?

Step 2: *Determine the size of the actuator required.* The designer must next assume a maximum working pressure. This assumption is often based on standard practices, established pressure standards, or existing fluid conductor capabilities. From this pressure the size of the actuator can be determined based on the output force the actuator is required to deliver. If more than one actuator is in the circuit, the resulting pressure reductions must be calculated for the other parts of the circuit. The maximum and minimum flow must be determined. Various types and sizes of actuators can be identified using manufacturers' catalogs and specification sheets.

Step 3: *Calculate the pump capacity needed.* When determining pump capacity, the maximum flow rate to all devices must be calculated. After considering the system's assumed working pressure, the required pump output can then be calculated and a pump and power source selected. If maximum pump capacity isn't required during the entire operation, an accumulator may be designed into the system. When the load is decreased, the excess pump capacity charges the accumulator. This allows a smaller pump to be used. Using what you know about the circuit demand and maximum and minimum pressure, manufacturers' data will allow you to select the correct accumulator for the system.

Step 4: *Decide what actuator controls are needed.* Determine how the actuator is controlled and any safety provisions needed. Will the actuator's operating circuit be controlled by hand or electric solenoid? Does the required motion demand the precision of a servo? The actuator's operating sequence must be determined, and controls such as sequence valves placed

to ensure correct operation. Starting, shutdown, and fail-safe conditions must all be considered. For instance, control devices must be installed to ensure that the actuator maintains its load-carrying position if the fluid-power supply is unexpectedly interrupted. Check valves should be added where it's necessary to make sure the hydraulic fluid flows through conductors in only one direction. Check valves also prevent an actuator from moving should the pressure fall below a level required to physically support a load. Counterbalance valves should be added where an actuator supports a load against gravity while the fluid-pressure-supplying pump idles.

Step 5: *Arrange the power unit layout.* The position of the power unit that drives the pump must be decided. The power unit can be part of the machine (as in a backhoe), it can be installed in a cabinet or case near the actuators, or it can be free-standing. Pump motors are often mounted above or below the reservoir, as reservoirs can be quite large and are made from steel. At this point, you must calculate the size and configuration of the reservoir. Conductors to and from the reservoir, along with the required check valves, must be placed to ensure the proper flow of fluid. Enough clearance must be left for the air breather and return lines to be unobstructed by nearby piping. Provide adequate cooling, by not restricting air flow around the reservoir or the oil cooling system. Maintenance access must be easy without requiring the disassembly of any major structures.

Step 6: *Add additional equipment for fluid distribution, measurement, and service.* The size of the piping or tubing must be calculated from the total flow requirements and individual component requirements. Tubing lengths and flexible-tubing requirements must be determined based on the location of the power source and the actuators. Additional equipment that may be necessary includes filters, pressure gauges, shut-off valves, thermostats, fluid heating and cooling equipment, and any electrical controls.

The next sections of this study unit show how some of the tasks laid out in these steps can be accomplished.

Selecting Pumps

The hydraulic pump is one of the most important components in the hydraulic system. The pump converts mechanical energy represented in its turning rotor into fluid flow that's later converted back into the mechanical motion of the actuators. Pumps are usually rated by their maximum operating pressure, pounds per square inch (psi), and their output flow in gallons per minute (gpm).

Pumps are generally divided into two basic types, *hydrodynamic* and *hydrostatic*. Hydrodynamic pumps are sometimes called non-positive displacement pumps because there's no positive seal between the inlet and outlet ports. The movement of the fluid is usually accomplished by pushing (or displacing) hydraulic fluid from the center to the outside of the pump. This displacement occurs because of the centrifugal force of the rotating impeller. The amount of flow is proportional to the impeller shaft speed. These pumps are used primarily in systems where the only resistance to flow is from the weight of the fluid and friction in the fluid conductors.

The output of a hydrodynamic pump is reduced as the resistance to the flow is increased. It's possible to completely block the output of a hydrodynamic pump while it's running without damaging the pump. However, because of the fact that the pump output decreases as load pressure increases, hydrodynamic pumps aren't as popular for modern hydraulic systems. Figure 6 shows an impeller-type non-positive displacement pump. The impeller creates centrifugal force which in turn causes pumping action.

Hydrostatic pumps are positive-displacement pumps. That is, for every revolution of the pump there's a fixed amount of fluid that's moved from the inlet to the outlet. There's a seal between the inlet and outlet so that even if resistance to flow is increased, the fluid isn't free to return to the input port. Except for leakage around the seal, the same amount of fluid is delivered to the hydraulic load with every pump revolution, making this pump very suitable to delivering power to a load.

FIGURE 6—An impeller-type non-positive displacement pump is shown here.

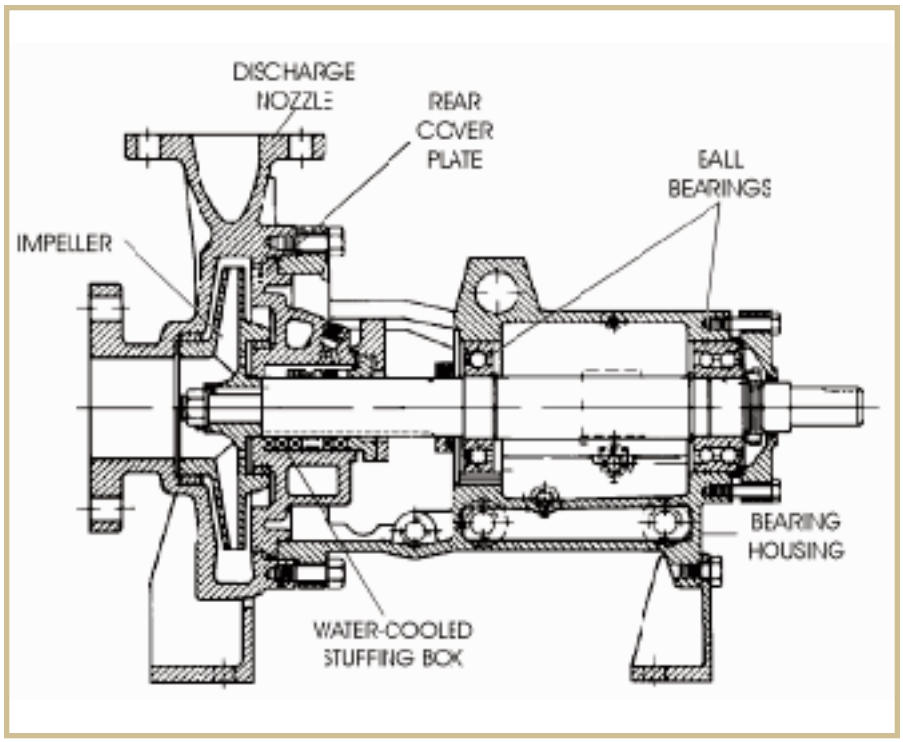

Pumps are specified by several parameters. We've already mentioned output flow and pressure. The output flow is always specified at a certain pressure and pump speed. Pump output is proportional to drive speed. The maximum pressure rating of a pump is determined by the manufacturer. Operation of a pump at pressures above this maximum level reduces pump life.

A pump's *displacement* is the volume of fluid that's moved for every revolution of the rotor. Displacement is measured in cubic inches per revolution. If you know the displacement of the pump and the shaft speed, you can calculate the gpm rating. For a gear pump, as shown in Figure 7, the displacement can be calculated from the physical dimensions of the pump. The formula for calculating displacement is as follows:

$$V_D\left(\frac{\text{in.}^3}{\text{rev}}\right)=\frac{\pi\left(D_2^2-D_1^2\right)W}{4}$$

V_D = Displacement volume of pump (in.^{3}/rev)

D_2 = OD of the gear teeth (in.)

D_1 = ID of the gear teeth (in.)

W = Width of gear teeth (in.)

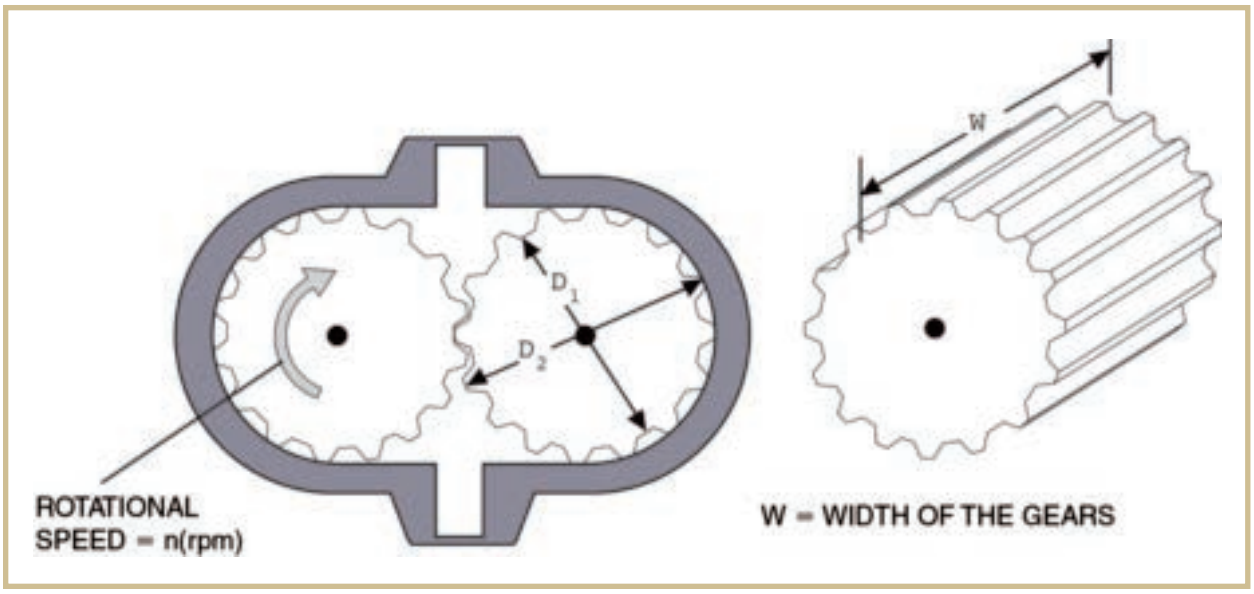

FIGURE 7—This gear pump is an example of a positive-displacement pump.

The *theoretical flow rate*, Q_T (in.^{3}/min), of the pump can be calculated from

$$Q_T\left(\frac{\text{in.}^3}{\text{min}}\right) = V_D \times n$$

In this equation, n is the revolutions per minute (rpm) of the pump shaft and V_D is the pump's displacement. Since 1 gallon per minute (gpm) is equal to 231 in.^{3}/min, we can rewrite the equation to calculate the theoretical flow rate in gpm:

$$Q_T\,(gpm) = \frac{V_D \times n}{231}$$

This calculation produces only a theoretical output level. This differs from actual pump output because of a small amount of leakage around the pump's seals and other inefficiencies. The term *volumetric efficiency* refers to the actual output divided by the theoretical output. It considers only the effect of seal-leakage on performance.

$$\textit{Volumetric efficiency}, e_v = \frac{\textit{Actual Output } (Q_A)}{\textit{Theoretical Output } (Q_T)} \times 100\%$$

For example, if a pump should theoretically deliver 8 gpm at 1000 psi and 1800 rpm, but actually delivers only 7 gpm, the volumetric efficiency at that point would be 7 gpm/8 gpm, or 87.5%. Volumetric efficiency will change with different operating pressures and pump speeds.

Mechanical efficiency is a rating of pump losses due to factors other than leakage. It's expressed as the ratio of output power (assuming no leakage) to input power:

$$\text{Mechanical efficiency}, e_u = \frac{\text{Pump Output Power}}{\text{Input Power to the Pump}} \times 100\%$$

Mechanical efficiencies are typically around 90 to 95%. Mechanical losses are due to friction in bearings and seals. This power is lost as heat to the pump's parts as well as to the fluid itself.

Using the units of horsepower, gpm, psi, rpm, and in-lb, mechanical efficiency is calculated by the following formula:

$$e_u = \frac{3676\, PQ_T}{T_u n}$$

P = Measured pump discharge pressure (psi)

Q_T = Calculated theoretical pump flow rate (gpm)

T_m = Measured input torque in prime mover of shaft of pump (in.-lb)

n = Measured pump speed (rpm)

The *overall efficiency* of the pump equals the volumetric efficiency times the mechanical efficiency. It considers all energy losses. The overall efficiency is calculated using the formula:

$$e_o = \frac{\text{Pump Output Horsepower}}{\text{Pump Input Horsepower}} \times 100\%$$

$$e_o = \frac{3676\, PQ_A}{T_u n}$$

Q_A is the actual (measured) pump-output flow-rate in gpm. All other variables are defined as before.

Selecting Drive Motors

A hydraulic pump must be driven by a motor. Availability, low cost, and wide selection make electric motors the most commonly selected type of drive motor. Once the required pump rating is determined, an electric drive motor is selected. Table 1 shows a chart that will allow you to estimate the size of the

Table 1

ELECTRIC MOTOR HORSEPOWER

ELECTRIC MOTOR HORSEPOWER REQUIRED TO DRIVE A HYDRAULIC PUMP

gpm	100 psi	200 psi	250 psi	300 psi	400 psi	500 psi	750 psi	1000 psi	1250 psi	1500 psi	2000 psi	2500 psi	3000 psi
½	.04	.07	.09	.11	.14	.18	.26	.35	.44	.53	.70	.88	1.10
1	.07	.14	.18	.21	.28	.35	.52	.70	.88	1.05	1.40	1.76	1.92
1½	.10	.21	.26	.31	.41	.52	.77	1.03	1.29	1.55	2.06	2.58	3.09
2	.14	.28	.35	.42	.56	.70	1.04	1.40	1.76	2.10	2.80	3.53	4.20
2½	.17	.34	.43	.51	.69	.86	1.29	1.72	2.15	2.58	3.44	4.30	5.14
3	.21	.42	.53	.63	.84	1.05	1.56	2.10	2.64	3.15	4.20	5.28	6.30
3½	.24	.48	.60	.72	.96	1.20	1.80	2.40	3.00	3.60	4.80	6.00	7.20
4	.28	.56	.70	.84	1.12	1.40	2.08	2.80	3.52	4.20	5.60	7.04	8.40
5	.35	.70	.88	1.05	1.40	1.75	2.60	3.50	4.40	5.25	7.00	8.80	10.50
6	.42	.84	1.05	1.26	1.68	2.10	3.12	4.20	5.28	6.30	8.40	10.56	12.60
7	.49	.98	1.23	1.47	1.96	2.45	3.64	4.90	6.16	7.35	9.80	12.32	14.70
8	.56	1.12	1.40	1.68	2.24	2.80	4.16	5.60	7.04	8.40	11.20	14.08	16.80
9	.62	1.24	1.55	1.86	2.48	3.10	4.65	6.18	7.73	9.28	12.40	15.56	18.58
10	.70	1.40	1.75	2.10	2.80	3.50	5.20	7.00	8.80	10.50	14.00	17.60	21.00
11	.77	1.54	1.93	2.31	3.08	3.85	5.72	7.70	9.68	11.50	15.40	19.36	23.10
12	.84	1.68	2.10	2.52	3.36	4.20	6.24	8.40	10.50	12.60	16.30	21.00	25.20
13	.89	1.78	2.23	2.67	3.56	4.45	6.68	8.92	11.20	13.40	17.80	22.40	26.72
14	.96	1.92	2.40	2.88	3.84	4.80	7.20	9.60	12.00	14.40	19.20	24.00	28.80
15	1.05	2.10	2.63	3.15	4.20	5.25	7.80	10.50	13.20	15.70	21.00	26.40	31.50
16	1.10	2.20	2.75	3.30	4.40	5.50	8.25	11.00	13.80	16.50	22.00	27.60	33.00
17	1.17	2.34	2.93	3.51	4.68	5.85	8.78	11.70	14.60	17.60	23.40	29.20	35.10
18	1.26	2.52	3.15	3.78	5.04	6.30	9.35	12.60	15.80	18.90	25.20	31.60	37.80
19	1.30	2.60	3.25	3.90	5.20	6.50	9.75	13.00	16.30	19.50	26.00	32.60	39.00
20	1.40	2.80	3.50	4.20	5.60	7.00	10.40	14.00	17.50	21.00	28.00	35.20	42.00
25	1.75	3.50	4.38	5.25	7.00	8.75	13.10	17.50	21.90	26.20	35.00	43.80	52.50
30	2.10	4.20	5.25	6.30	8.40	10.50	15.60	21.00	26.40	31.50	42.00	52.80	63.00
35	2.45	4.90	6.13	7.35	9.80	12.20	18.40	24.50	30.60	36.70	49.00	61.20	73.50
40	2.80	5.60	7.00	8.40	11.20	14.00	20.80	28.00	35.20	42.00	56.00	70.40	84.00
45	3.15	6.30	7.87	9.45	12.60	15.80	23.60	31.50	39.40	47.30	63.00	78.80	94.50
50	3.50	7.00	8.75	10.50	14.00	17.50	26.00	35.00	44.00	52.50	70.00	88.00	105.00
55	3.85	7.70	9.63	11.60	15.40	19.30	28.60	38.50	48.40	57.80	77.00	96.80	115.50
60	4.20	8.40	10.50	12.60	16.80	21.00	31.20	42.00	52.80	63.00	84.00	105.60	126.00
65	4.55	9.10	11.40	13.60	18.20	22.80	33.80	45.50	57.20	68.20	90.00	114.00	136.50

electric motor required to operate a pump at a given pressure and flow rating. The chart values are based on a pump efficiency rating of 85% and are calculated from the formula:

$$\text{Motor Horsepower (hp)} = \frac{\text{Flow Rate (gpm)} \times \text{Pressure (psi)}}{1714 \times .85}$$

The horsepower requirement varies directly with pressure and flow rate. Keep in mind that these relationships apply to all the different types of positive-displacement pumps, including gear pumps, gerotor pumps, and vane pumps with balanced or unbalanced designs, and fixed and variable displacements.

Selecting Actuators

Hydraulic actuators are the components in the systems that convert hydraulic power into mechanical work. They take the energy put into the system by the pump and convert it into either rotary or linear motion. Linear actuators, which are commonly referred to as cylinders, are able to move loads back and forth. Rotary actuators move loads in limited rotational directions, differing from hydraulic motors, which are able to continuously drive shafts and turn gearboxes. The main criterion for selecting an actuator is the type of motion desired. Actuators can be made to provide linear, rotary, or oscillating type motions.

The simplest actuator is the *linear actuator*. Figure 8 shows a schematic representation of a single-acting linear actuator. This actuator can be extended with pressure applied to the input port, but it must be retracted by the load's force on the rod. Figure 9 shows a diagram of a double-acting cylinder, which more closely controls the rod's movement. The rod can be either extended or retracted by applying pressure to the appropriate port. In standard double-acting cylinders, less force is available to move the piston in the retracting direction because the rod area subtracts from the total cylinder area.

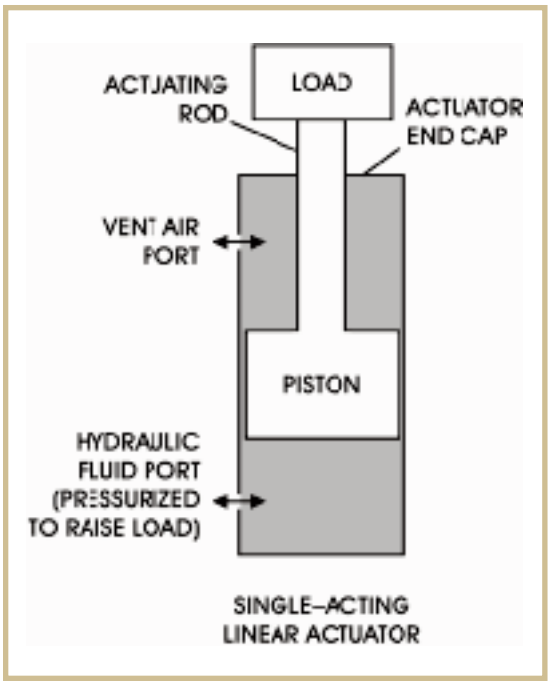

FIGURE 8—A Single-Acting Hydraulic Actuator

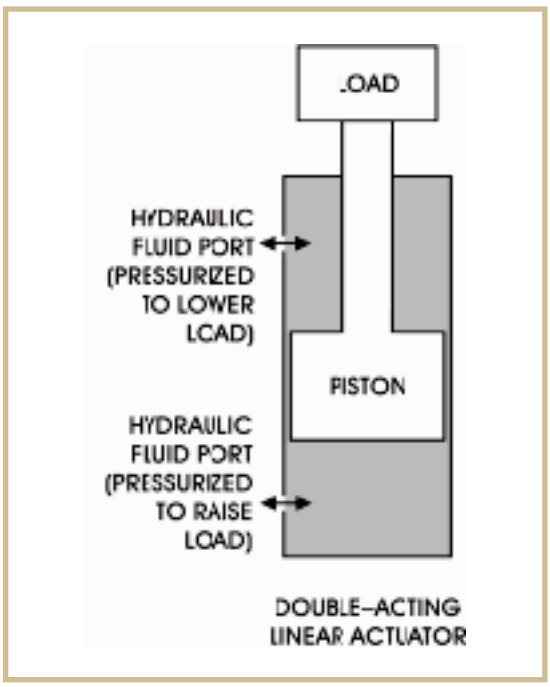

FIGURE 9—A Double-Acting Hydraulic Cylinder

One of the requirements for the selection of an actuator is determining the size required to provide the force and horsepower necessary. Some of the basic equations to determine actuator capabilities are listed below:

(1) *Force (lb) = Pressure (psi) × Piston Area (in.$^{2)}$*

For the retraction stroke of a double-acting cylinder,

(2) *Force (lb) = Pressure (psi) × [Piston Area (in.^{2})–Rod Area (in.^{2})]*

Other useful relations for calculating load and power relations are the following:

(3)
$$Velocity\left(\frac{ft}{sec}\right) = \frac{Input\ Flow\left(\frac{ft^3}{sec}\right)}{\left[Piston\ Area\ (ft^2) - Rod\ Area\ (ft^2)\right]}$$

(4)
$$Actuator\ Horsepower\ (hp) = \frac{Piston\ Velocity\left(\frac{ft}{sec}\right) \times Force\ (lb)}{550}$$

(5)
$$Horsepower = \frac{Input\ Flow\left(\frac{ft^3}{sec}\right) \times Pressure\ (psi)}{1714}$$

In addition, it's sometimes necessary to make the following conversions:

(6) $$1\ ft^2 = 144\ in.^2$$

(7) $$1\ gallon = 231\ in.^3 = 0.1337\ ft^3$$

(8) $$1\ gallon\ per\ minute\ (gpm) = 3.85\frac{in^3}{sec} = 0.00223\frac{ft^3}{sec}$$

The following examples will illustrate the use of these equations:

Example 1: What's the horsepower required to extend a rod in a cylinder at a rate of 18 in./sec while delivering a force of 3000 lb?

Answer: The velocity of the load and the actuator rod is first

$$\text{converted from } \frac{in}{sec} \text{ to } \frac{ft}{sec}: \frac{18\left(\frac{in}{sec}\right)}{12} = 1.5\frac{ft}{sec}$$

From Equation 4 we can then calculate the horsepower directly:

$$hp = \frac{1.5\left(\frac{ft}{sec}\right) \times 3000\ (lb)}{550} = 8.2\ hp$$

Example 2: In the above cylinder, what's the required flow rate of fluid into the cylinder while the rod is extending if the cylinder bore diameter is 4 inches?

Answer: The cylinder area is $\frac{\pi D^2}{4} = \frac{\pi \times (4\ in)^2}{4} = 12.57\ in^2$

The volume displaced by the moving piston is the area of the cylinder times the length of the stroke. In one second, this volume equals:

Volume = 12.57 in.^{2} × 18 in. = 226.19 in.^{3}

Using Equation 7, the volume change in one second is 0.98 gallons. The required fluid-flow rate is therefore

$$0.98\left(\frac{gal}{sec}\right) \times 60\left(\frac{sec}{min}\right) = 58.8\ gpm$$

Example 3: What's the pressure required to allow the actuator to deliver a 3000 lb force?

Answer: The force provided by the rod is 3000 lb, with a piston area of 12.57 in.$^{2.}$ The pressure must therefore be

$$\frac{3000\ (lb)}{12.57\ (in^2)} = 238.7\ psi$$

You can also calculate the pressure required by rearranging Equation 5:

$$\frac{hp \times 1714}{Flow\ Rate\ (gpm)} = \frac{8.2\ (hp) \times 1714}{58.8\ (gpm)} = 239\ psi$$

Example 4: Assume the rod diameter is 1.5 inches in the above cylinder. If retraction force must be the same as the extension force, 3000 lb, does the pressure required increase or decrease during the retraction cycle?

Answer: Rearranging Equation 2,

$$Pressure = \frac{Force\ (lb)}{\left[Piston\ area\ (in^2) - Rod\ area\ (in^2)\right]}$$

$$Pressure = \frac{3000\ (lb)}{\left[12.57\ (in^2) - \frac{\pi(1.5\ in^2)}{4}\right]} = 277.7\ psi$$

The pressure increases, as you would expect because of the lower piston area available for the pressure to act upon during the retraction stroke.

When designing and constructing hydraulic systems in the workplace, it's not enough to understand the power and capabilities and fluid-supply requirements of an actuator. You must also tend to other details, including how the actuator will be physically mounted. Different actuator mounting methods are shown in Figure 10. Actuators can be mounted by attached flanges, lug mounts, clevises, or trunnions, to name a few. Rod ends are usually threaded so that they can be attached to loads directly or to devices that prevent misalignments between the cylinder, the loads, and the mounting points.

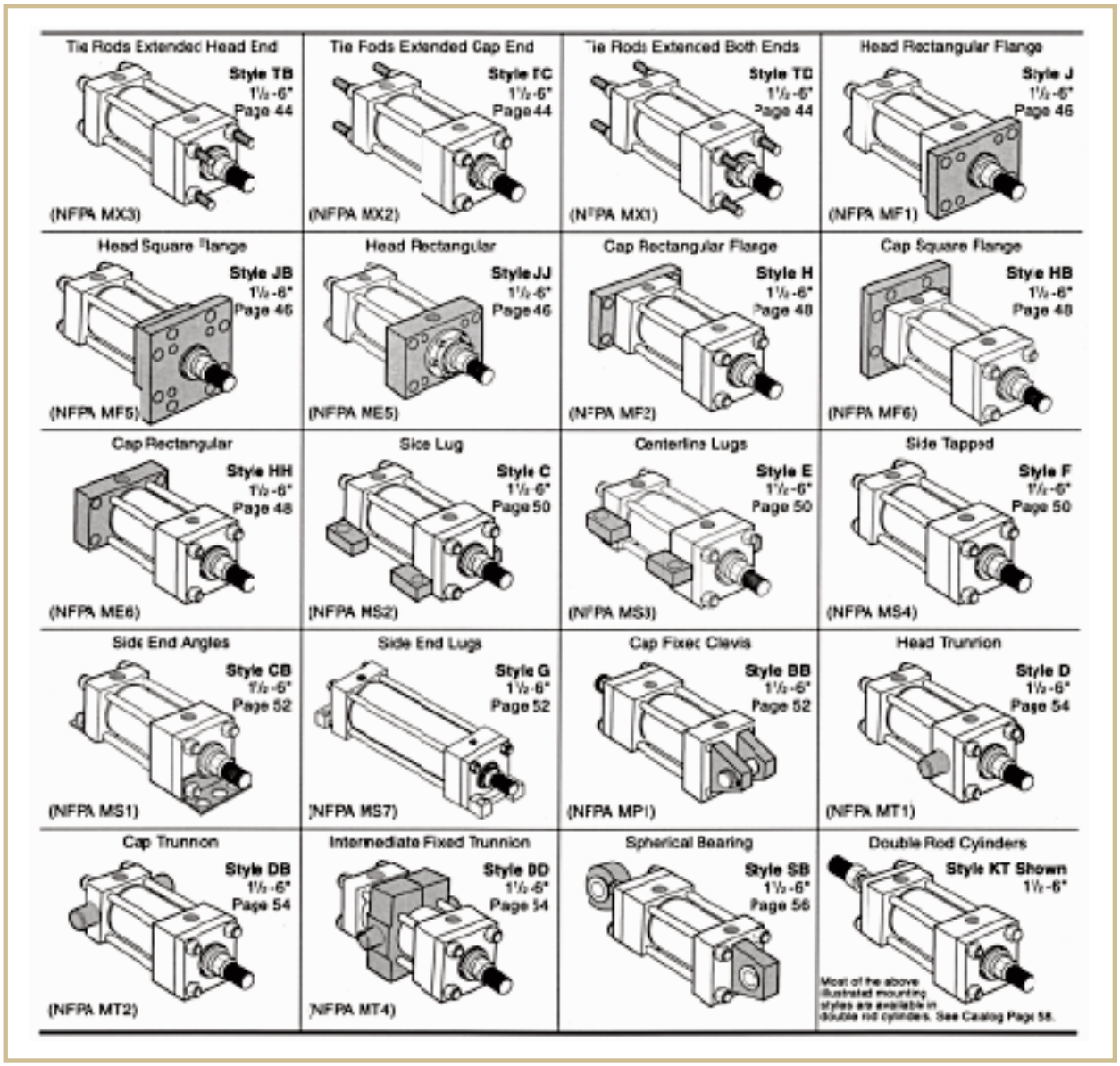

FIGURE 10—Actuators can be mounted in many different configurations. **(Courtesy of Eaton Corporation)**

Mechanical power can be transmitted by hydraulic power using either linear or rotary actuators. In the previous section we discussed linear actuators and calculated several of their operating characteristics. In this section we will take a closer look at actuators in which the output is rotary motion. Several types of *rotary actuators* are available. They can be constructed to give limited rotary motion and reciprocation (back-and-forth motion). Shortly, we'll focus on hydraulic motors, which are capable of continuous rotation. As you already know, motors are very similar to hydraulic pumps in design. As with pumps, gear, vane, or piston motors are used in hydraulic systems. Figure 11 shows a sliding-vane rotary actuator while Figure 12 shows a gear motor.

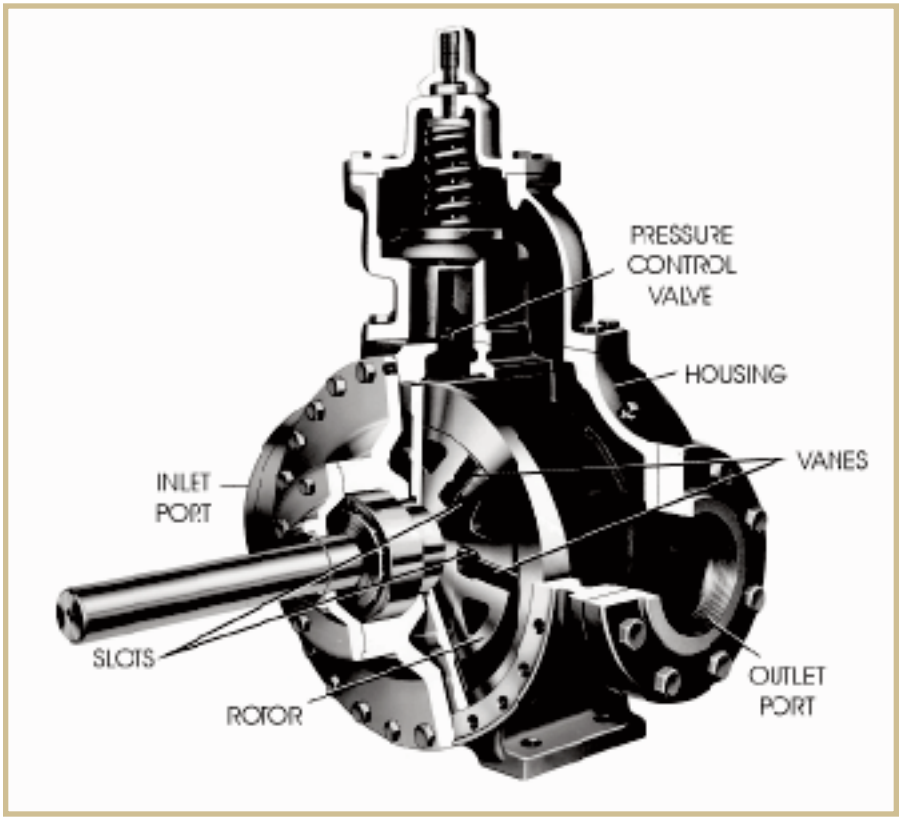

FIGURE 11—A sliding-vane rotary actuator delivers limited, non-continuous rotary motion.

The torque of a limited-rotation actuator can be calculated from the internal dimensions of the device. The torque is dependent upon the pressure of the fluid, the surface area of the vane, and the average diameter of the vane assembly.

FIGURE 12—An external gear motor is used for continuous rotary motion.

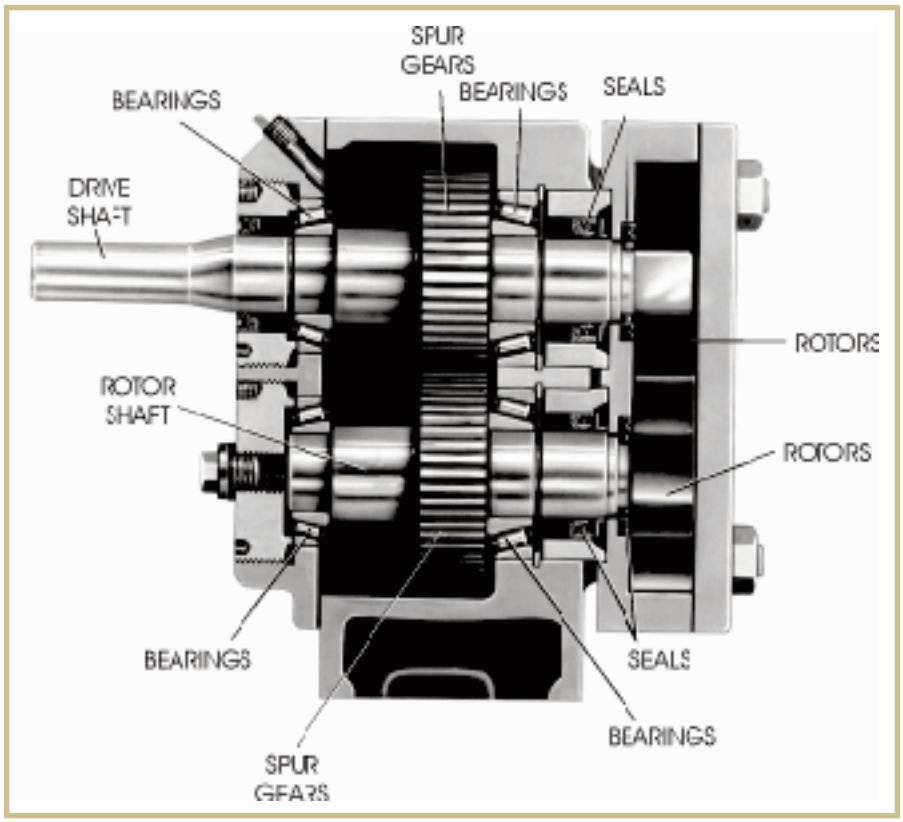

The torque of a single-vane rotary actuator is calculated using the formula:

$$T[in\text{-}lb] = \left(\frac{PWV}{8}\right) \times \left(D_V^2 - D_R^2\right)$$

T = Torque (in.-lb)

P = Hydraulic pressure (psi)

W = Width of vane (in.)

D_V = Outer diameter of vane (in.)

D_R = Diameter of rotor (also known as the hub) (in.)

The volumetric displacement of the rotary actuator can be calculated from the dimensions in a manner similar to calculating V_D for a pump. The volumetric displacement, V_D is:

$$V_D\left(\frac{in.^3}{rev}\right) = \frac{\frac{\pi}{4}\left(D_V^2 - D_R^2\right)}{W}$$

If the volumetric displacement, V_D, of the motor is known or calculated, the torque is equal to:

$$T[in\text{-}lb] = \frac{PV_D}{\pi}$$

Example: What's the torque developed by a single-vane rotary actuator whose vane diameter is 3.0 in., rotor diameter is 1.0 in., and whose vane width is 1.0 in.? The system pressure is 1000 psi.

Answer: The volumetric displacement is

$$V_D = \frac{\pi}{4}(3.0^2 - 1.0^2) \div 1.0 = 6.28 \frac{in.^3}{rev}$$

The torque is then calculated by:

$$T = \frac{1000\ [psi] \times 6.28\ [in^3]}{\pi} = 1000\ [in\text{-}lb]$$

Selecting Motors

Hydraulic motors can be of the *gear*, *vane*, or *piston* types. These motors have rotors that are rotated by the pressure of the fluid. This action allows hydraulic motors to convert the energy in pressurized hydraulic fluid into rotory motion.

Figure 13 shows a gear motor that uses a pressurized fluid at the motor inlet and meshing gear teeth to develop torque. The torque is the net effect of the pressure pushing on the two gear teeth, labeled *A* in Figure 13, causing rotation in the desired direction. Torque isn't affected by the oil that's carried to the outlet port by the groupings of gear teeth labeled *B*. The rotation can be instantly reversed by switching the

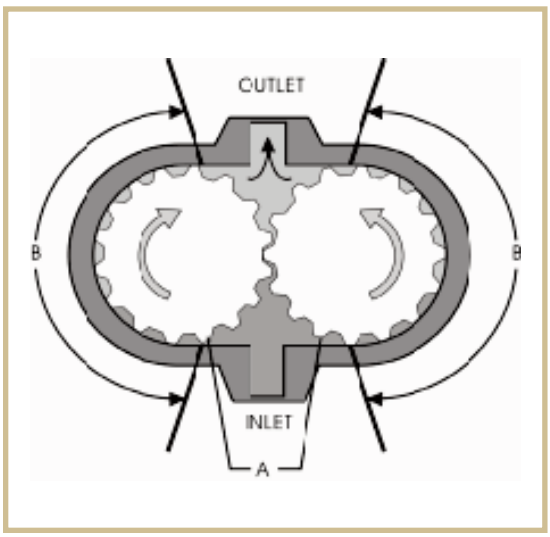

FIGURE 13—Gear motors can develop very high torque.

fluid pressure from the input port to the output port. Gear motors are relatively simple and inexpensive. The pressure applied to one side of the gear causes high side loads on the shafts and bearings, and thus limits gear motors to about 2000 psi operating pressure and speeds and flow rates of less than 2400 rpm and 150 gpm respectively.

Vane motors use a rotor with sliding vanes as shown in Figure 14. This is a balanced pressure design that has lower bearing and shaft loads than a gear motor. These motors are able to operate at higher speeds (up to about 4000 rpm) with flow rates of up to 250 gpm. Operating pressures can be as high as 2500 psi. They're more complicated and more costly than gear motors.

FIGURE 14—Balanced vane motors offer high torque, high speed, and a minimum of bearing loading.

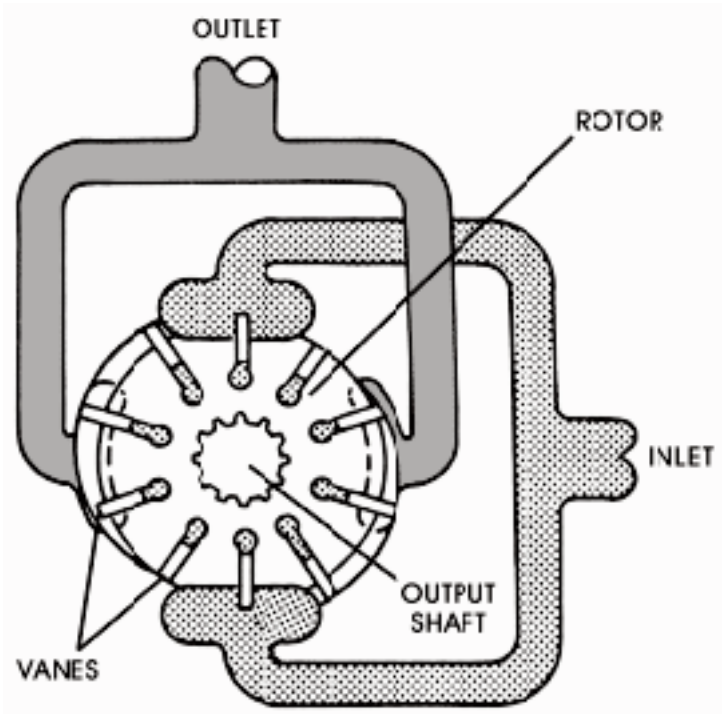

Piston motors are the most efficient of the three motor types and offer several advantages (Figure 15). They're able to operate at system pressures of up to 5000 psi, which means they're capable of producing higher levels of torque. Speeds can be as high as 12,000 rpm, and flow rates of 450 gpm are

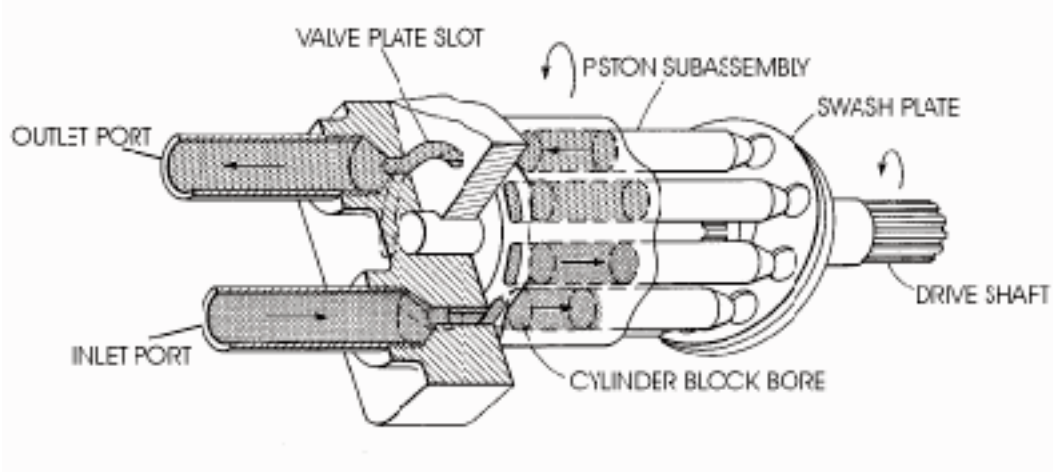

FIGURE 15—Piston motors can run at higher pressures and speeds than other types of motors. They're adjusted to produce varying output torque.

possible. Remember, output power is a direct function of pressure and flow rate. Piston motors are also capable of producing variable torque, by varying the swash plate angle. By redirecting the pressure from one port to the other, they're also able to provide dynamic breaking and instant reversal. Hydraulic motors can often be mounted directly on the wheel hubs of large vehicles or the toolholder of a machine tool. This eliminates the need for complex gear boxes and often gives the operator uniquely sensitive control of the vehicle or machine.

The theoretical torque of any motor can be determined by the following relation, which is the same as the equation for rotary actuators:

$$T[in - lb] = \frac{PV_D}{\pi}$$

T = Torque (in.-lb)

V_D = Volumetric displacement (in.^{3})

P = Pressure (psi)

From this equation, you can see that the motor torque depends on the operating pressure and the volumetric displacement of the motor.

Selecting and Sizing Conductors to Match Flow Requirements

As you know, pressure in a hydraulic system is generated by a pump. This pressure distributes hydraulic fluid throughout the system so that the energy stored in the fluid can be used where it's needed. The distribution system is composed of one or more of the four basic types of *fluid conductors: steel pipe, steel tubing, plastic tubing*, and *flexible hoses*. The type of conductor chosen depends primarily on the expected range of system pressures and flow rates. Other factors that influence the type of conductor used relate to the operating environment. These include such factors as chemical compatibility with the fluid type, ambient temperature, the presence of corrosive fluids or gases, vibration conditions, and whether or not the equipment moves.

Steel pipe was the first type of conductor used, and it's still one of the least expensive types. Steel tubing is easy to fabricate and disassemble for service, but it's more expensive than pipe. Copper tubing shouldn't be used in a hydraulic system because over time it oxidizes and degrades the fluid. Stainless-steel tubing can be used for harsh environments but it's very expensive. Plastic tubing is now used more frequently than previously for some hydraulic systems because it's very inexpensive and easy to fabricate. The last type of conductor mentioned, flexible hose, is made of many different types of elastomeric compounds. It's used for components that experience relative motion, requiring the attached fluid conductors to flex.

Any conductor in the system must be sized to handle the expected system pressure and the flow rate. The wall thickness of the conductor is the primary factor in determining its resistance to rupture, while the inside diameter determines the conductor's ability to support the expected flow rate.

Internal pressure generates *tensile stresses* (sometimes called *hoop stresses*) within the conductor walls. If the stress exceeds the yield strength of the material, the conductor will burst. Figure 16 shows how internal pressure acts in producing tensile stresses in the walls of the conductor. Basically, tensile stress is defined as the force pulling on the pipe wall area divided by the

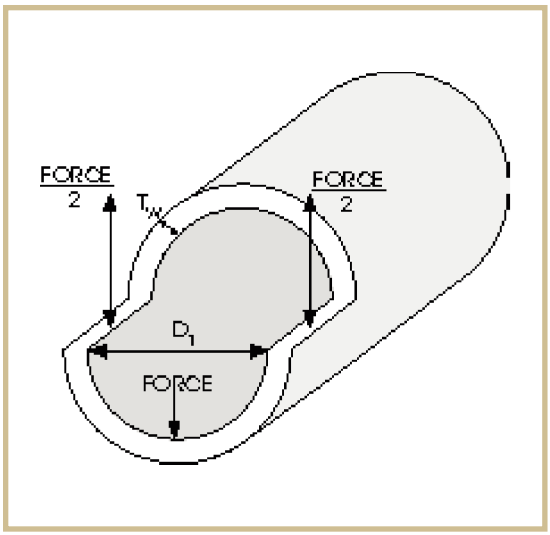

FIGURE 16—Internal pressure causes tensile stresses in the walls of fluid conductors.

area over which the force acts. That area is determined by the inside and outside diameters of the pipe or tubing. The stress in the pipe wall can be approximated by the relation:

$$\sigma = \frac{PD_1}{2T_W}$$

σ = Stress (psi)

P = Pressure (psi)

D_1 = Inside diameter (in.)

T_W = Wall thickness (in.)

This formula shows that the stress in the pipe is directly related to the pressure and inside diameter and inversely related to the wall thickness. The length of the pipe has no effect on the stress. The *burst pressure*, P_B, is the pressure in the system that will cause the pipe to burst, and is given by

$$P_B = \frac{2T_W S}{D_1}$$

where S is the tensile strength of the pipe. Steel has a variety of different possible tensile strengths depending on the type of steel and its heat treatment. Steel used for hydraulic systems typically has a tensile strength of 40,000 to 60,000 psi (40 to 60 kpsi).

You may hear the term *working pressure*, P_W, which refers to the maximum safe working pressure of the fluid. It can be defined as

$$P_W = \frac{P_B}{FS}$$

FS is a safety factor determined by industry standards. Unless specifically defined by a specification or referenced standard, you can use an FS of 8 for working pressures up to 1000 psi. Use an FS of 6 for pressures of 1000 to 2500 psi, and an FS of 4 for pressures over 2500 psi. For systems where pressure shocks are expected, an FS of 10 should be used.

Steel pipes are classified by their nominal size and a "schedule" number that specifies the wall thickness. Figure 17 shows dimensions for some commonly used pipe sizes. Steel pipe is also classified by nominal size. *Nominal size* refers to the thread size of fittings used with the pipe. This means that as the schedule (wall thickness) increases, pipes with the same nominal size have smaller ID's.

Steel tubing is classified by nominal size, but in this case the size refers to the OD of the tubing. Figure 18 shows some of the dimensions of commonly used steel tubing. It's usually made out of SAE 1010 dead soft cold drawn steel, which has a nominal tensile strength of 55,000 psi. For higher pressures, AISA 4130 tubing, with a tensile strength of about 75,000 psi, is specified.

The second system requirement that influences the size of the conductor is the flow rate. Figure 18 also shows the maximum flow rate handled by each conductor size. The conductor's inside diameter determines the velocity of the fluid required to meet a given flow rate. The relation is given by

$$Flow\ rate\left(\frac{in^3}{sec}\right) = Fluid\ velocity\left(\frac{in.}{sec}\right) \times Cross\text{-}sectional\ area\ (in^2)$$

or, in a more useful form,

$$Area\ (in^2) = \frac{Flow\ Rate\ (gpm) \times 0.3208}{Velocity\ \left(\frac{ft}{sec}\right)}$$

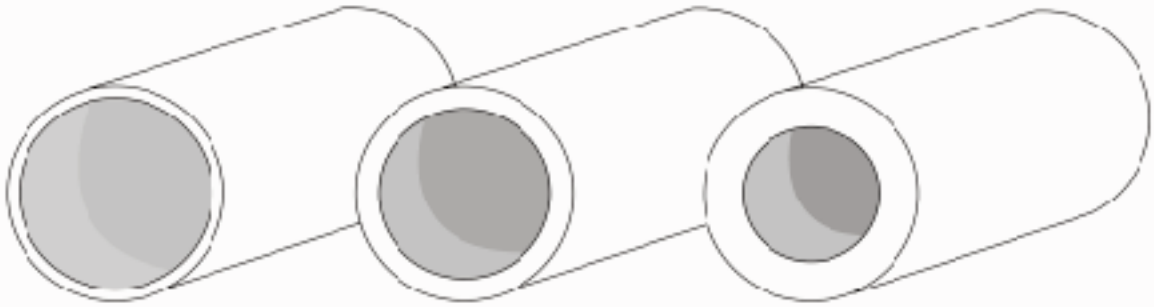

SCHEDULE RELATIVE COMPARISON OF PIPE CROSSECTIONS

STEEL PIPE SIZES AND TYPICAL PRESSURE RATING

Nominal Pipe Size in.	Outside Diameter of Pipe in.	Number of Threads per inch	Length of Effective Threads in.	Schedule 40 (Standard)		Schedule 80 (Extra Heavy)		Schedule 160	
				Pipe ID in.	Burst Pressure psi	Pipe ID in	Burst Pressure psi	Pipe ID in.	Burst Pressure psi
¼	0.540	18	0.40	0.364	16,000	0.302	22,000	—	—
⅜	0.675	18	0.41	0.493	13,500	0.423	19,000	—	—
½	0.840	14	0.53	0.622	13,200	0.546	17,500	0.466	21,000
¾	1.050	14	0.55	0.824	11,000	0.742	15,000	0.614	21,000
1	1.315	11½	0.68	1.049	10,000	0.957	13,600	0.815	19,000
1¼	1.660	11½	0.71	1.380	8,400	1.278	11,500	1.160	15,000
1½	1.900	11½	0.72	1.610	7,600	1.500	10,500	1.338	14,800
2	2.375	11½	0.76	2.067	6,500	1.939	9,100	1.689	14,500
2½	2.875	8	1.14	2.469	7,000	2.323	9,600	2.125	13,000
3	3.500	8	1.20	3.068	6,100	2.900	8,500	2.624	12,500

FIGURE 17—Pipes used as hydraulic fluid conductors come in standard sizes and wall thicknesses.

TUBING SPECIFICATIONS WITH 8 : 1 SAFETY FACTOR		
FLUID FLOW RATES gpm	TUBING OD in.	TUBING WALL THICKNESS in.
1	¼	0.035
1.5	5/16	0.350
3	⅜	0.350
6	½	0.420
10	⅝	0.490
20	⅞	0.720
34	1¼	0.109
58	1½	0.120

*Based on a maximum velocity flow of 15 fps.

TUBING SPECIFICATIONS WITH 6 : 1 SAFETY FACTOR		
FLUID FLOW RATES gpm	TUBING OD in.	TUBING WALL THICKNESS in.
2.5	⅜	0.058
6	⅝	0.950
10	¾	0.120
18	·	0.148
30	1¼	0.180
42	1½	0.220

Above ½-in. tubing, welded-flange fittings, or fittings having metal-to-metal seals, or seals that seal with pressure, are recommended.

FIGURE 18—Tubing for fluid conductors comes in standard sizes. Tube sizes are based on the nominal OD of the tubing.

The inside radius of the tubing or pipe determines the cross-sectional area according to the formula for the area of a circle:

$$A = \pi r^2$$

or, since we most commonly work with diameters,

$$A = \frac{\pi D_1^2}{4}$$

since the inside diameter, D_1, is what we're concerned with. Figure 19 shows a *nomograph* that can be used instead of the above formulas to quickly find flow rate, flow velocity, pipe area, or pipe inside diameter.

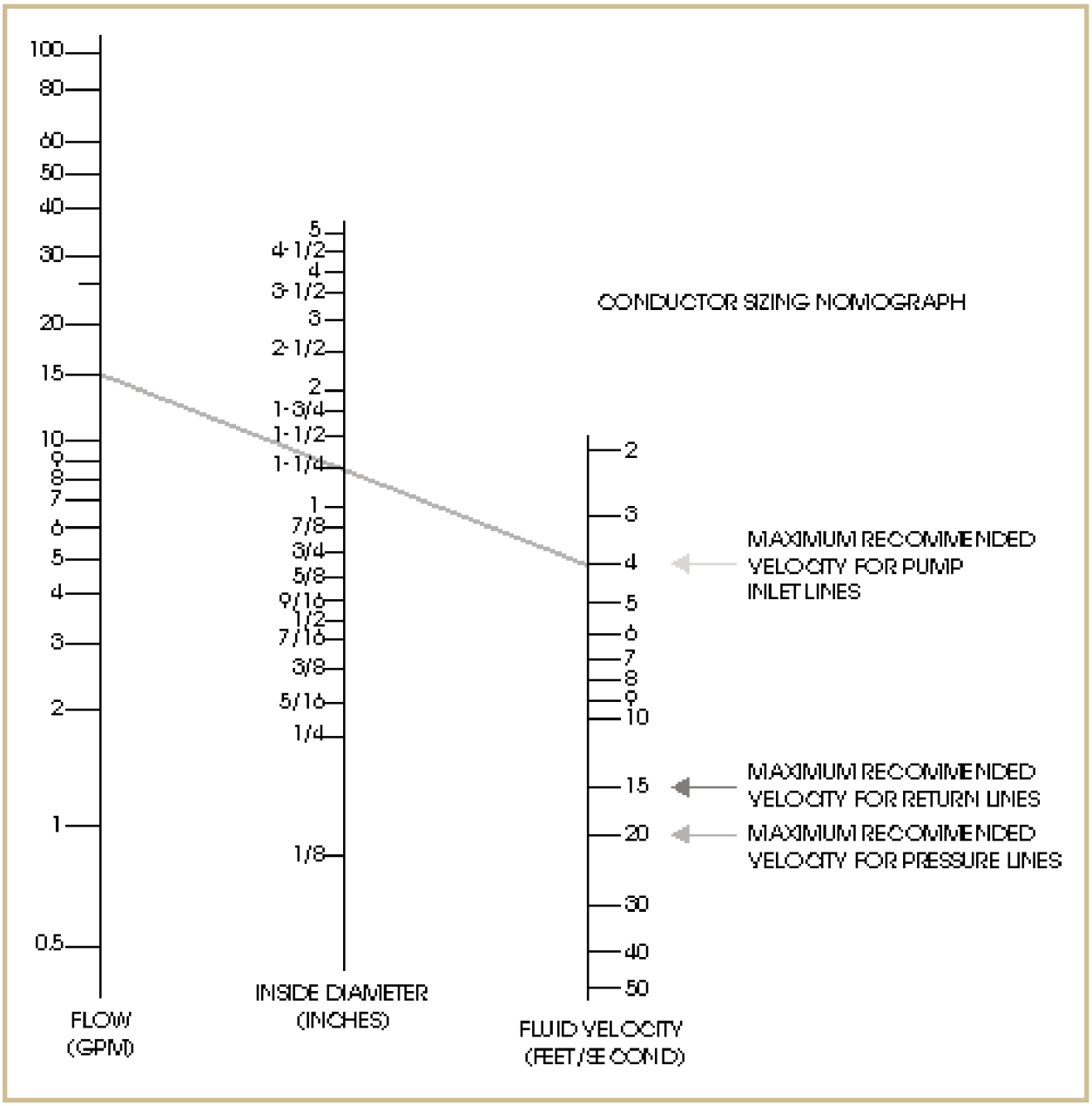

FIGURE 19—This chart, known as a nomograph, allows you to easily determine the conductor size that satisfies a set of fluid-flow parameters. **(Courtesy of Eaton Corporation)**

Example 1: What's the flow rate, in gpm, for a ½-inch inside diameter pipe? Assume a fluid velocity of 10 ft/sec.

Answer: From the nomograph, find the 10 ft/sec point on the right-hand scale, and the ½-inch inside diameter point on the middle scale. Read on a straightedge in the figure to find an approximate flow rate of 6.25 gpm. To calculate the flow rate instead of reading the approximate rate on the nomograph, first find the conductor's cross-sectional area:

$$Area = A = \frac{\pi D_i^2}{4} = \frac{\pi(0.500^2)}{4} = 0.1963\ in^2$$

$$Flow\ Rate = Q(gpm) = \frac{Area(in^2) \times Velocity\left(\frac{ft}{sec}\right)}{0.3208}$$

$$Q(gpm) = \frac{0.1963\ (in^2) \times 10\left(\frac{ft}{sec}\right)}{0.3208} = 6.12\ gpm$$

The method you use would depend on the accuracy required.

It's obvious that the larger the pipe or tubing, the higher the flow rate will be for a given flow velocity. It's important that you realize there are limitations on pipe size and flow velocity. For suction lines, the maximum recommended fluid velocity is 4 ft/sec. This velocity level prevents low reservoir pressures from causing cavitation. *Cavitation* is the production of vapor bubbles in a fluid. If extreme, cavitation can cause erosion in fluid lines and conductors, and can disrupt the proper operation of pumps and motors.

For pressure lines, a maximum flow rate of 20 ft/sec is recommended. The high levels of fluid friction and disrupted fluid flow that come with high velocities cause excessive pressure drops. Friction is the main cause of lost energy in hydraulic systems. High fluid velocities cause the flow to change from a condition known as *laminar*, or streamline, flow to *turbulent* flow. In laminar flow, all of the fluid flows in smooth layers and the fluid at the center of the pipe has the highest velocity. This is the more desirable condition. If high

velocities result in turbulent flow, the fluid swirls around inside the pipe, different fluid layers travel in different directions and bump each other. This condition resembles a swollen stream. Turbulence produces high friction and therefore greater energy losses. Fluid conductors must be sized so that the required flow rate in gallons per minute (gpm) can be delivered to all parts of the system while maintaining velocity levels within the recommended range.

Example 2: What's the minimum inlet size for a 20 gpm pump?

Answer: Using 4 ft/sec as a maximum inlet (suction) velocity, we can use the nomograph to determine that the minimum inside diameter of the inlet port must be about 1¼ (or 1.25) in. If instead we use the formulas, the area is found to be

$$A = \frac{20\,[gpm] \times 0.3208}{4\left(\frac{ft}{sec}\right)} = 1.604\ in^2$$

This is used to calculate the minimum diameter of 1.429 in. The difference in values results because the nomograph provides an approximation. In this case, it would be a safe to select a pipe with a 1.5 in. inside diameter.

As fluid travels through hydraulic conductors and their connecting fittings, some energy (and pressure) is lost due to friction within the system and changes in fluid direction. From your knowledge of basic physics, you should realize that changing the velocity *or* direction of anything (including fluids) requires work, and therefore energy. The only source of energy in a hydraulic system is within the fluid itself. Anything that causes even a small change in the velocity or direction of the fluid robs the system of useful energy. This includes everything from roughness inside conductors to changes in pipe diameters and flow through valves. The calculation of individual pressure drops within fluid flow systems is very complex and based largely on experimental studies. These studies account for friction in individual components such as valves and pipes. If you need to make more accurate calculations, you should refer to a more complete hydraulics text, or a component-supplier technical manual furnished for hydraulic design.

Sizing Reservoirs

As you know, the *reservoir* is the container that provides the fluid storage space for the hydraulic system. It's also used to keep the fluid clean and at the proper temperature. A typical reservoir built to industry standards is shown in Figure 20. The tank is constructed of welded steel plate and is designed

FIGURE 20—Hydraulic Fluid Reservoir

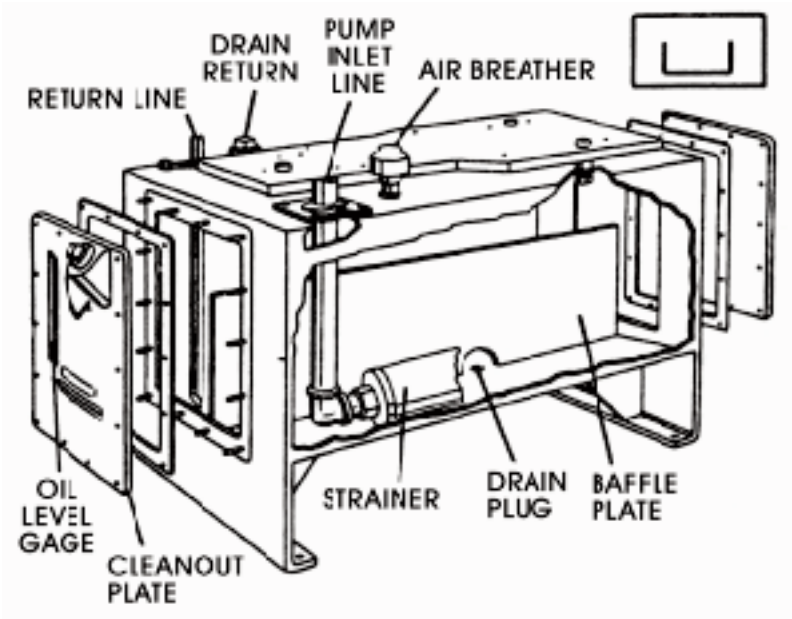

to make fluid maintenance as easy as possible. Some of the major components of a reservoir are

- Cleanout plates—provide access for periodic maintenance and internal cleaning
- *Strainer*—removes large foreign particles from the fluid
- *Air breather*—accommodates changes in fluid levels by allowing air to enter the reservoir in nonpressurized systems
- *Baffle plates*—prevent turbulence in the tank, allow trapped air to escape from the fluid, and aid in cooling the fluid
- *Drain plug*—located in the lowest part of the tank

- *Pump inlet line*—supplies fluid from the reservoir to the pump
- *Return line*—collects low-pressure fluid from the system

It's critical to the proper operation of a system that a reservoir be sized for the particular application. A properly sized reservoir should

1. Contain enough fluid to supply the required fluid under all conditions
2. Keep the fluid height above the level of the pump inlet line to prevent air from entering
3. Have an adequate amount of surface area to dissipate the heat generated by the system
4. Have enough volume to allow for thermal expansion of the fluid
5. Be designed to allow dirt and particles to settle to the bottom instead of continuing back into the system

Practical experience has shown that a reservoir capable of holding three times the gallons per minute flow rate of the pump will be adequate:

$$\text{Tank size (gallons)} = \text{Pump (gpm)} \times 3$$

In special applications such as aviation or military use, this rule-of-thumb may have to be modified and the tank size calculated more precisely. This is usually accomplished using data supplied by the component provider.

Check Your Learning 1

Throughout *Hydraulic Power System Troubleshooting*, you'll be asked to pause and check your understanding of what you've just read by completing a "Check Your Learning" exercise. Writing the answers to these questions will help you to review what you've studied so far. Please complete *Check Your Learning 1* now.

1. A(n) _____ supplies high pressure fluid to components operating simultaneously in case of limited pump capacity.

2. Calculating the diameter of an actuator is determined after

   a. the pump is chosen.
   b. determining the type of motion.
   c. pressure limitations are known or assumed.
   d. the power unit is installed.

3. The capacity in gallons of a single-acting cylinder whose ID is 4.00 inches and whose maximum stroke length is 18 inches is _____ gallons.

4. The pressure required for a 3.00 inch-ID single-acting cylinder to provide a force of 1500 pounds is

   a. 1500 psi.
   b. 500 psi.
   c. 215 psi.
   d. 180 psi.

5. The ratio of a pump's output power to its input power is known as _____.

6. A pump must supply 15 gpm at a working pressure of 400 psi. A minimum of _____ hp electric motor will be required.

7. _____ are the most efficient hydraulic motors and operate at the highest rotational speed.

8. The maximum recommended flow velocity for pressure lines is _____.

9. Five gallons per minute flowing through a 3/8-inch ID tube will produce a flow velocity of about _____ feet per second.

   a. 2
   b. 10
   c. 15
   d. 20

(Continued)

Check Your Learning 1

10. _____ should be used as a fluid conductor when ease of fabrication and maintenance are the prime requirements.

11. A fluid conductor carries fluid in a system with a pressure of 250 psi. If the OD is ¼-inch and the wall thickness is 0.035 inches, what's the stress produced in the tubing due to the fluid pressure? _____ psi

12. When using scheduled pipe for hydraulic power applications, schedule _____ pipe has the thickest walls for a given pipe diameter.

13. For a pump-input flow rate of 9.5 gpm, the pipe ID should be no smaller than about _____ inches.

    a. 1
    b. 2
    c. 3
    d. 4

14. Which of the following reservoir sizes (in gallons) would you choose for a hydraulic system that supplies a total fluid flow of 22 gpm to the various hydraulic actuators?

    a. 10
    b. 25
    c. 50
    d. 75

Check your answers with those on page 71.

FLUID POWER INSTRUMENTATION AND CONTROL

Just like electrical circuits, hydraulic circuits must include control elements. Basic control elements will direct pressurized fluid from the pump to the loads, a combination of motors, cylinders, or other devices. Valves will turn the circuit on and off, and safety devices will prevent dangerous operation. Instrumentation devices can be added in the lines and to the loads to provide feedback to operators or other control devices about line pressures and rates of movement, fluid temperature, or position of the load. Feedback systems, which can provide electrical or fluid signals, monitor one or more outputs and report the condition of the output(s) to the overall system's control. These feedback signals enable the system to respond automatically. This response may cause the system to stop or increase motion, increase or lower the system pressure, or initiate other actions depending on the purpose of the machine.

In this section you'll learn about the design, construction, and use of common hydraulic control and instrumentation devices that increase the intelligence and versatility of hydraulic control systems.

Hydraulic Integrated Circuits (ICs) and Cartridge Valves

Electronic circuits were once made of discrete components such as resistors, capacitors, inductors, and transistors. These circuits were bulky and inefficient to assemble because each component had to be positioned and soldered in place. Also, each circuit had a specific function that couldn't be changed once the circuit was completed. The development of *integrated circuits* advanced the efficiency and versatility of electronic circuits. These preassembled circuits are connected in various ways to accomplish different functions. Many different functions can be obtained with the same components, and the size of the overall circuit can be reduced because of standardization and miniaturization of the integrated circuits.

Hydraulic integrated circuits offer the same versatility as electronic ICs. Hydraulic integrated circuits are formed by assembling various standardized valves, called *cartridge valves*, into a machined *manifold*. The manifold is a single metal block with ports and internal passageways to take the place of standard conductors. Manifold openings are machined to accept the threaded ends of the cartridge valves and other hydraulic components. Figure 21 shows various cartridge valves, whose functions can include directional control, relief, pressure reduction, unloading, sequence, and other circuit functions. Figure 22 shows a manifold with two cartridge valves installed.

FIGURE 21—Various Cartridge Valves **(Parker Hannifin Hydraulic Valve division)**

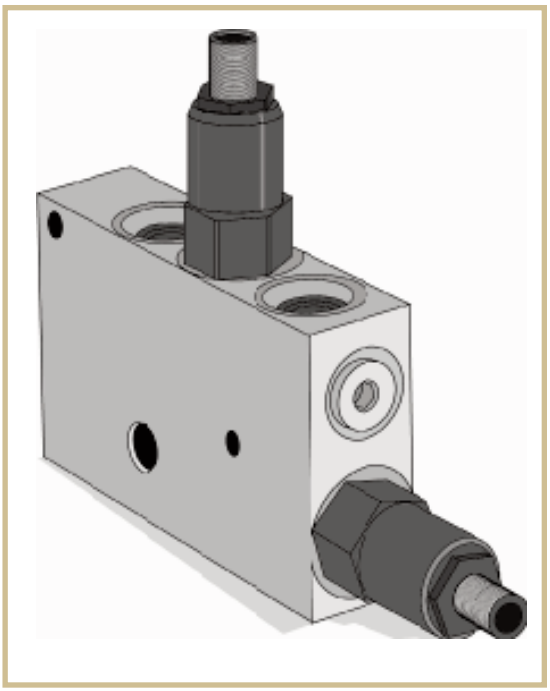

FIGURE 22—This is a manifold with two cartridge valves installed.

Hydraulic integrated circuits offer several advantages to the circuit designer, technician, and maintenance person. A manifold with cartridge valves is easier to install than many separate lines and components. The space requirements for a hydraulic IC are usually much less than standard components. Because ICs are so compact, it usually takes less time to install the circuit, and there are fewer fittings to connect. Also, because all of the components are in one location, it's easier to maintain the circuit. If a valve should fail, it's a simple matter to change the valve by disconnecting it from the block or manifold.

Hydraulic Fuses

Hydraulic fuses operate in the same way as electrical fuses. Figure 23 shows the cross section of a hydraulic fuse. If fluid pressure exceeds a set value, a thin metal disk ruptures and allows fluid to return to the tank. This relieves pressure in the hydraulic line. The entire fuse or disk must then be manually replaced before the circuit can be reactivated. A hydraulic fuse differs from a relief valve because the relief valve can be reset, in the same way as a circuit breaker. Hydraulic fuses are often used with pressure-compensated

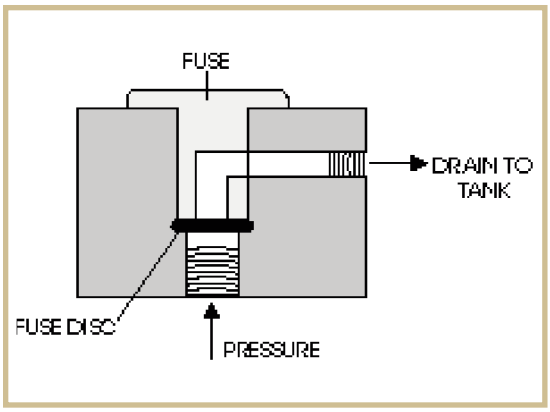

FIGURE 23—A Cross Section of a Hydraulic Fuse

pumps for overload protection in case the compensator control on the pump fails. Fuses can also be used as safety devices in high-pressure lines to ensure operator or equipment safety.

Pressure and Temperature Switches

Figure 24 shows a cross section of a *pressure switch.* Once they sense a preset pressure level, pressure switches operate a set of electrical contacts. There are several different types of pressure switches, depending on the pressure range and the level of accuracy required.

Pressure switches have three contacts labeled C for Common, NO for normally open, and NC for normally closed. The common terminal is always connected to either the NO or NC terminal, depending on whether an electrical device is to be switched on or off. When a normally closed pressure switch is in its normal or default condition, there's an electrical connection between the C and NC terminals. When the switch is activated (the preset pressure is reached) the contacts labeled C and NO are connected, and the C and NC are disconected.

The simplest type of pressure switch is the *diaphragm switch*. It has a sealed diaphragm that acts on a snap-action switch, and is useful up to about 150 psi. Another type of pressure switch is the *Bourdon tube switch*. In this switch, a curved metal tube is connected to the pressure inlet. As the pressure increases, the curved tube begins to unwind around its axis. The switch is mechanically connected to the end of the tube. The Bourdon tube switch operates over a range of 50 to

FIGURE 24—The internal details of a pressure switch are shown here. **(Courtesy of Barksdale, Inc. Los Angeles, CA)**

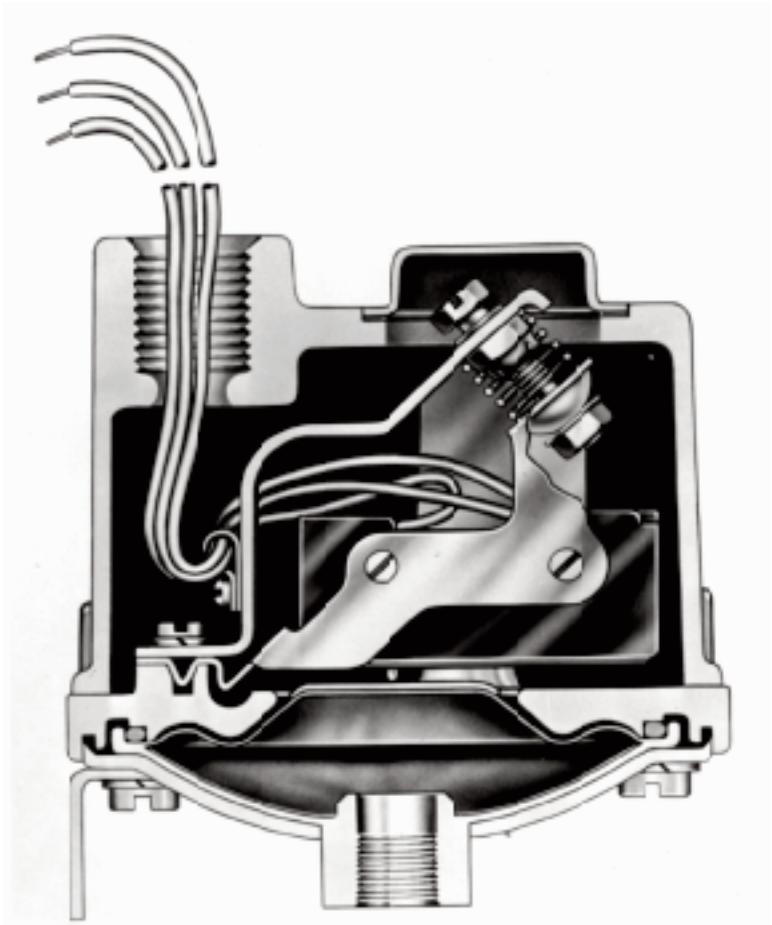

18,000 psi. A third type of pressure switch is a *sealed piston switch*. In this type of switch, pressure is applied to a piston that's working against a spring. When the pressure exceeds a preset limit, the piston moves and activates a snap-action switch. Sealed piston switches are used over the range of 15 to 12,000 psi.

Just as pressure sensors can detect changes in pressure, temperature can also be used to activate electrical switches. Figure 25 shows the cross section of a *temperature switch*. The switches can be set to open or close on a temperature rise or temperature fall. As with pressure switches, there are NO, NC, and Common terminals that are connected to the electrical circuit.

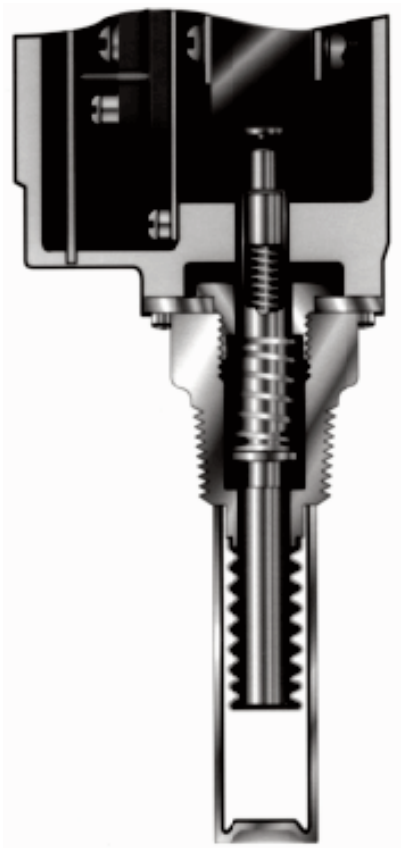

FIGURE 25—This is a cut-away view of a normally open (NO) temperature switch. Most switch types are available in both NO and NOC types. **(Courtesy of Barksdale, Inc. Los Angeles, CA)**

Manual Switches

Figure 26 shows several types of push-button switches and their schematic symbols. *Manual switches* control electric circuits that turn solenoid valves on or off. Some of the switch-related terminology you need to understand is listed below:

- SPST—Single pole, single throw
- DPST—Double pole, single throw
- SPDT—Single pole, double throw
- DPDT—Double pole, double throw
- NO—Normally open
- NC—Normally closed
- LS—Limit switch

FIGURE 26—Several types of push-button switches

- PS—Pressure switch
- TS—Temperature switch

The simplest types of manual switches include SPST–NO (read "single pole, single throw–normally open"), SPST–NC, and DPST and DPDT types. The term *pole* refers to the number of separate circuit connections (or pairs of contacts) than can be controlled by a single switch.

Limit Switches

Limit switches perform the same function as manual switches, that is, adding or removing electrical power, except that limit switches are mechanically actuated by another part of the system. For example, extending an actuator beyond a certain length may cause a part of the actuator rod to contact a limit switch. The limit switch may then activate a solenoid which in turn causes the cylinder to retract. Limit switches are available in normally closed (NC) or normally open (NO) configurations.

Limit switches can function as safety devices to prevent damage to actuators, or they can control simple mechanical functions such as reciprocation. Figure 27 shows a simple electrical and hydraulic circuit that uses two limit switches to make an actuator reciprocate back and forth between two

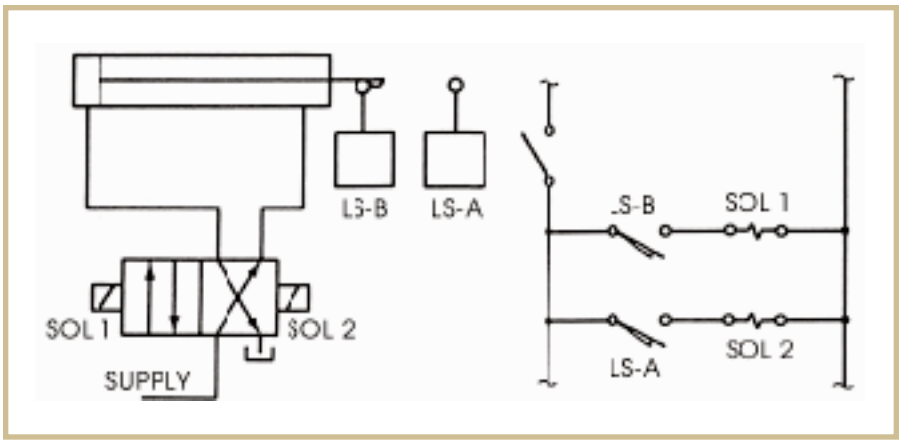

FIGURE 27—Limit switches can be used to cause a simple reciprocating actuator movement.

preset positions. When the limit switch LS-B is contacted as the rod retracts, solenoid 1 is activated. This causes the directional valve to change to the extend-rod position. When the rod extends to the point where it contacts LS-A, solenoid 2 is actuated. This causes the directional valve to select the retract-rod position. This cycle will repeat itself until hydraulic power is removed from the circuit.

Servo Valves

Servo valves are directional control valves that control the direction and amount of fluid flow in a hydraulic circuit. Servo valves incorporate a feedback mechanism that allows the valve to adjust itself based on some parameter of the output, such as position, velocity, or acceleration. There are mechanical servo valves that use a mechanical link to adjust the valve. Electrohydraulic servo valves rely on electrical signals to adjust the valve.

Figure 28 shows a mechanical servo valve. The heart of the valve is the sliding sleeve that's connected to the feedback link. Let's walk through two cases that show how the servo valve controls the load position.

Let's assume that a load is attached to the end of the actuator rod, and that the load tends to pull the rod away from its current position. The current rod position has been set by an operator who typically sets the control input and then walks away from the machine. As shown, the sleeve is centered on the input shaft so that the supply port is blocked by the

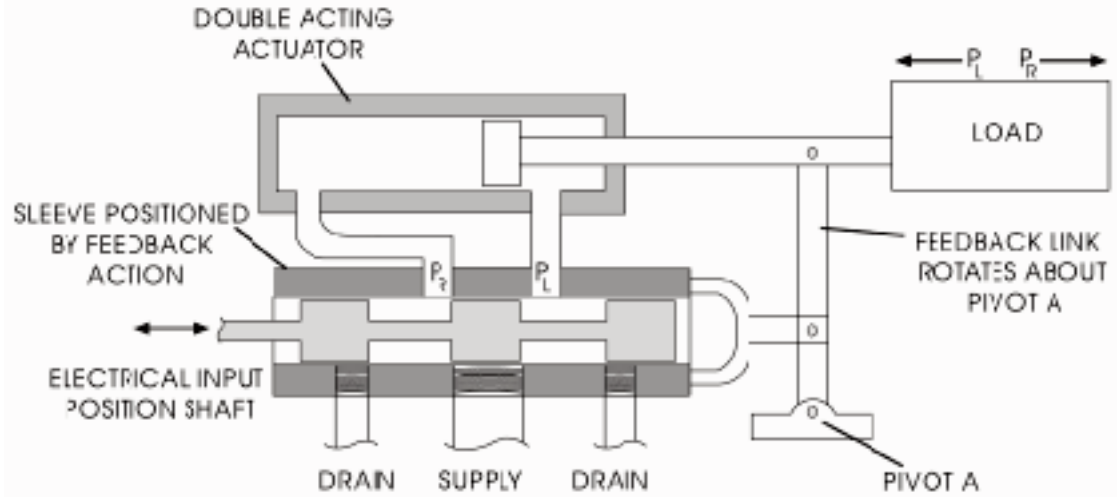

FIGURE 28—Servo valves use feedback from a sensor to control their adjustment. The feedback signal is either mechanical, as shown here, or electrical.

input shaft. If the load connected to the actuator were to drift, pulling the actuator rod to the right, the feedback link would move and the sliding sleeve would shift to the right, bringing the supply port with it. This opens the supply port by moving it away from the input shaft's blocking feature and allows oil flow into the supply port and through P_L to the cylinder. This moves the actuator rod to the left. The rod would continue to move to the left until the input shaft's blocking feature again covers the sliding sleeve's supply port, blocking the fluid flow and stopping the actuator's movement.

Now, let's assume that an operator moves the input control. When the input control (and therefore the input shaft) is moved to the right, the supply port is uncovered and hydraulic fluid is allowed to flow through P_R. This forces the actuator rod to move to the right. As the rod moves, the feedback link moves the sliding sleeve to the right until the supply port is again covered by the input shaft and the actuator rod stops. In this case, the input shaft acts as the position control for the actuator rod.

You can see that a servo valve can control the position of the rod based on the position of an input control, even if changes in loading cause the actuator rod to move. This type of feedback mechanism is called a *closed-loop system*. Figure 29 shows a diagram of how a closed-loop system operates, and the basic elements used to construct this type of control system.

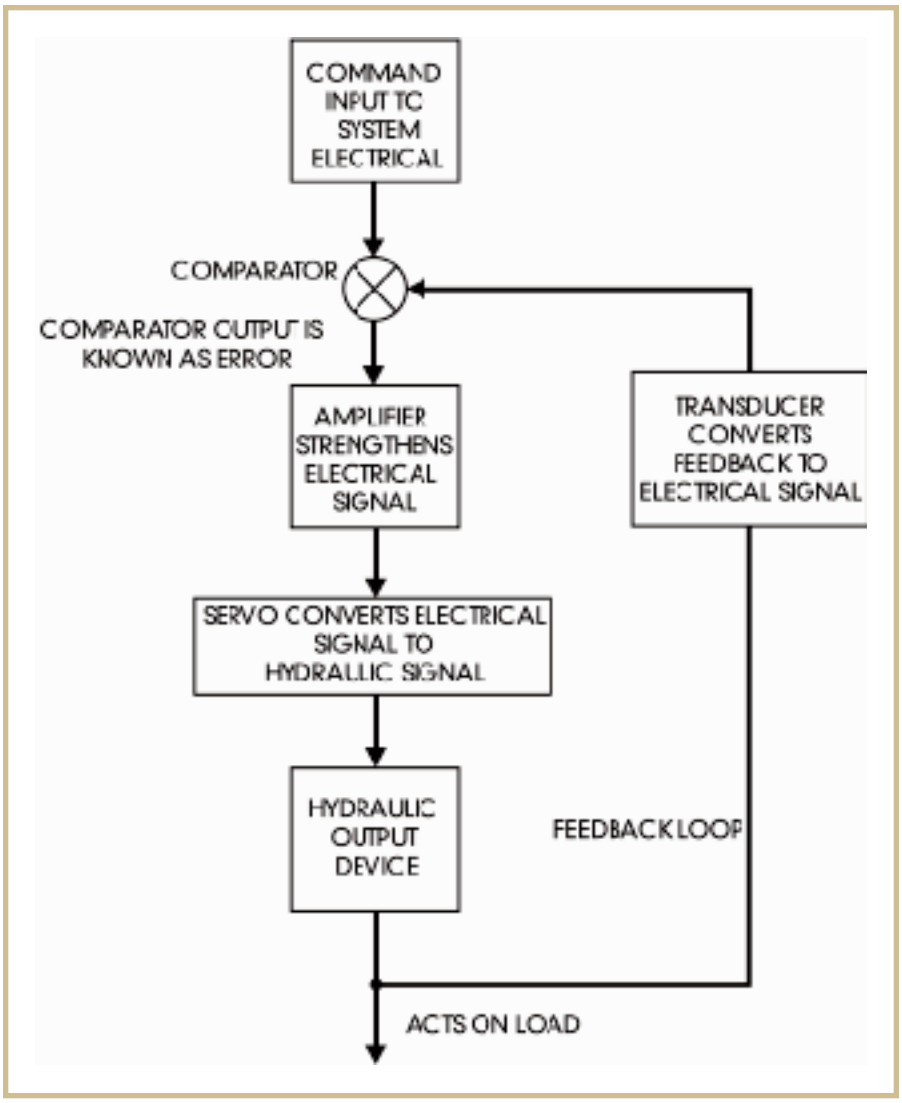

FIGURE 29—Operations of a closed-loop system.

An electrical command signal is put into a *comparator* which compares the feedback signal and the control signal. Depending on the type of feedback sensor, the sum or difference of the two signals is then sent to an amplifier that increases the strength of the comparator signal. The amplifier output is sent to the servo valve that controls the actuator. A sensor is mechanically attached to the actuator to measure some important feature of the output, such as load position, velocity, or acceleration. This sensor sends the feedback signal to the comparator, where it's compared to the input command signal. The process then repeats itself. If something in the load changes, it's sensed and compared to what it should be, and adjustments are automatically made by the servo valve.

With the ever increasing use of computers and electronic controls, another type of servo valve used today is the *electro-hydraulic servo valve*. These valves combine hydraulic outputs with electronic feedback and control signals. Transducers that measure position, velocity, or acceleration of the load are connected in the system to provide the feedback signals. These signals are then used to control the servo valve.

Figure 30 shows a simplified diagram of an electrohydraulic servo system, with the required elements of both the electrical and hydraulic portions of the circuit.

FIGURE 30—Electro-hydraulic servo valves combine electrical and fluid power control elements.

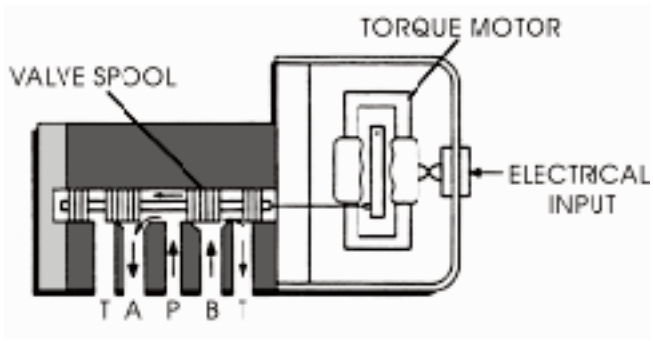

Figure 31 illustrates the various components needed in an electrohydraulic servo valve. The electrical portion of the valve consists of an armature, electrical coils, pole pieces, and a torque motor. The armature and other electrical parts are sealed off from the hydraulic fluid. The armature moves a pilot spool, which in turn positions the main spool using pilot-signal pressure. This controls the flow of pressurized fluid from the input ports to the control ports A and B. Mechanical feedback to the armature is accomplished with a link from the main spool that adjusts the pilot spool position. This torque works with or against the force from the armature. When the two forces are balanced, the pilot spool doesn't move. This system ensures that the position of any load connected to the control ports depends on the input signal to the servo.

Electrohydraulic servo valves are relatively complex but offer great advantages, when combined with electrical components, for precision control of hydraulic loads. When performing setup or adjustment of servo valves, it's important to carefully follow the manufacturer's instructions.

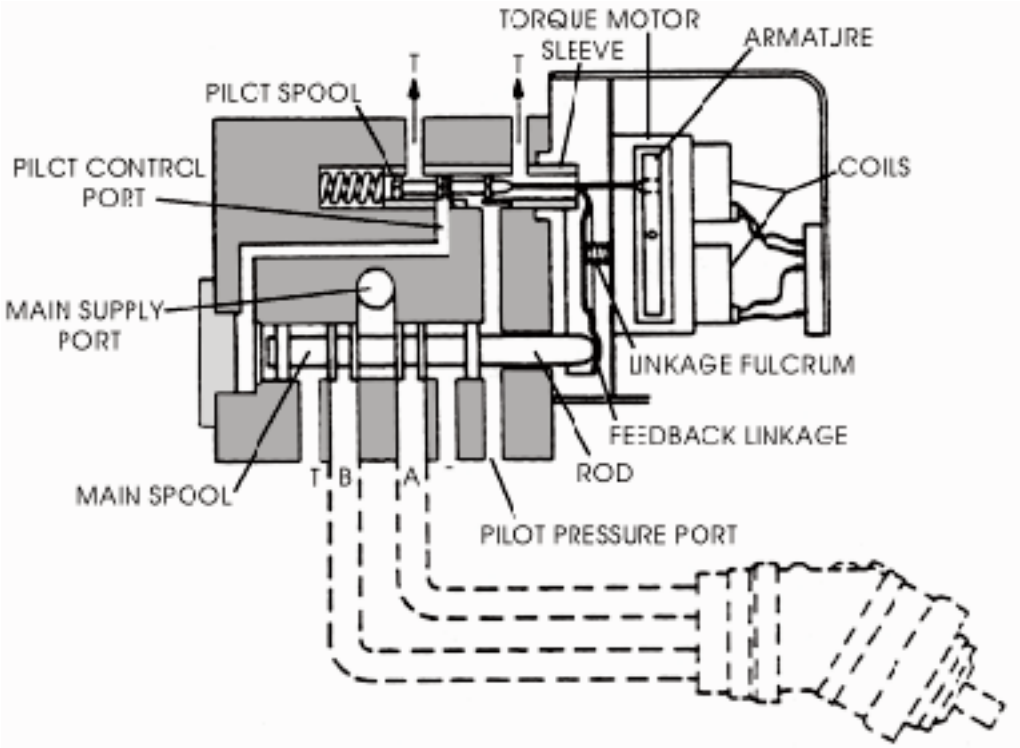

FIGURE 31—Cross Section of an Electrohydraulic Servo Valve

Electrical Relays

A *relay* is a switch that's activated by electric current. Current flows through an electric coil and produces a magnetic field. The field then attracts a steel armature with electrical contacts. The armature is spring-loaded so that when the electric current is cut off (the coil is de-energized), the armature will return to its starting position. The electrical contacts are attached to the end of the armature and the frame, and wires are attached to the contacts and brought out to a connecting block. The circuit for the contacts is insulated from the coil circuit, other contact pairs, and the relay frame. Just like switches, relays can have multiple sets of contacts that are either NO or NC. Figure 32 shows a diagram of a simple relay. Relays can be timed to open or close upon energizing or de-energizing. This makes a wide range of options available when designing electrical controls for hydraulic circuits.

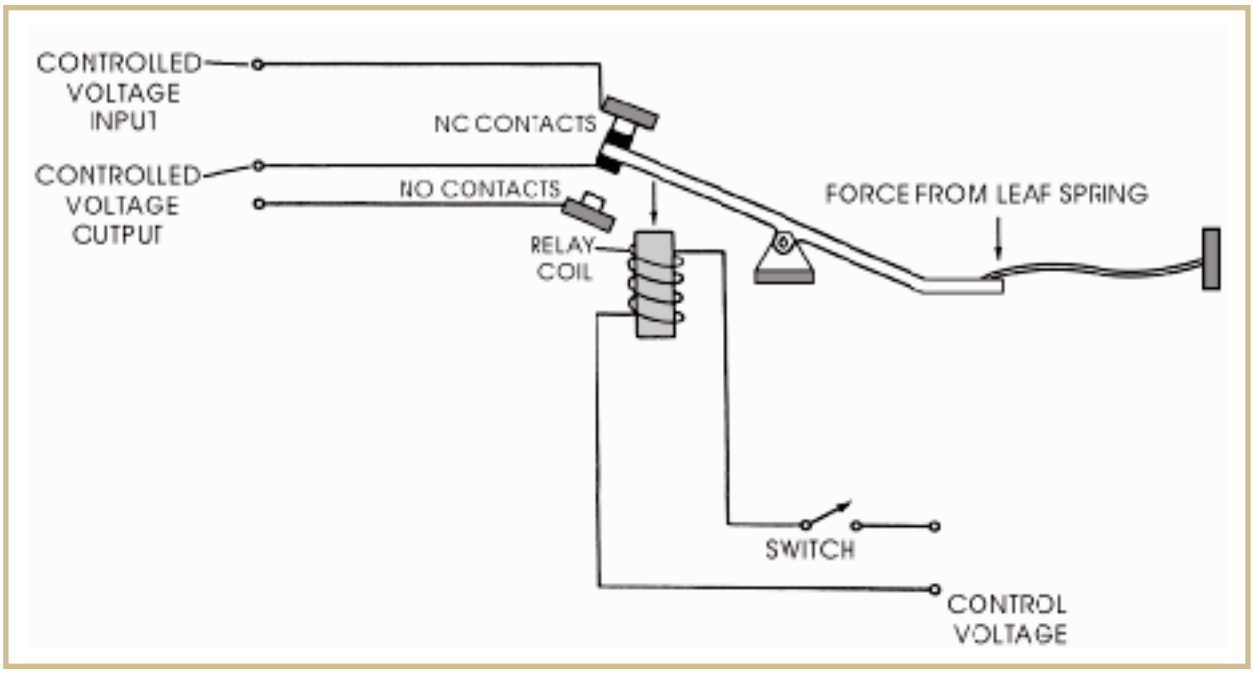

FIGURE 32—Electrical relays are reliable ways to control fluid power components. They offer the flexibility of being controlled by computers or other electrical control signals.

Check Your Learning 2

1. _____ are pressure-line safety devices that can't be reset.

2. Hydraulic ICs are threaded into a(n) _____ which has integral fluid conductors.

3. The operation of servo valves relies on output from a(n) _____ mechanism that reports on position, velocity, or acceleration of an actuator.

4. _____ servo valves use electrical signals to control the operation of the valve.

5. _____ switches are mechanically actuated by a moving component within the hydraulic system.

6. A(n) _____ switch could be used to control a valve that would direct fluid through a heat exchanger whenever the fluid temperature became too hot.

Check your answers with those on page 71.

MAINTAINING HYDRAULIC SYSTEMS

Components in modern hydraulic systems are precision-engineered devices and can give years of reliable service. However, they're mechanical devices, and some wear of components is inevitable. Maintenance is therefore a necessity if the system is to operate properly for its designed lifetime. In an industrial environment, unplanned downtime is very expensive, so most industries use a planned *preventative maintenance* program that schedules service and replacement of critical components such as filters and fluid at regular intervals. These maintenance operations are usually done at times when the operation of the equipment is unnecessary or when other plant maintenance is being performed. In determining a preventative maintenance schedule, it's important to consult component manufacturers' specifications about the frequency of required maintenance operations. These will often be stated as a maximum number of hours of operation between service intervals. In practice, however, the severity of service cycles varies significantly. Well-established preventative maintenance schedules come only with experience. Following is a list of the most common causes of hydraulic failures:

1. Dirty or clogged filters
2. Low oil level in the reservoir
3. Seals that leak
4. Air or water in hydraulic lines
5. Improper fluid
6. Excessive fluid temperature
7. Excessive fluid pressure

Maintenance personnel and machine operators must be trained to recognize the early symptoms of hydraulic failure. Excessive noise, or a change in types of noise in a pump, is often caused by air in the lines. This is usually the result of clogged filters or loose fittings in the pump-inlet, also known as suction, circuit. Other recognizable symptoms include

things such as sluggish or erratic operation of actuators, incorrect fluid temperature, hydraulic fluid on the floor or on other parts of the system, or system pressures higher or lower than normal.

Sealing Out Contaminants

Seals in hydraulic systems keep hydraulic fluid inside the system and dirt and contaminants out. They also allow motion of actuator rods, pumps, and valves without excessive oil leakage. There are two general types of seals: *static* and *dynamic*. Static seals, which are the seals used between flanges and other nonmoving parts, aren't subject to wear. Static seals include gaskets, O-rings, and materials used between housings and flanges. Dynamic ring seals are placed around moving parts to allow movement while retaining fluids inside the system. Dynamic seals come in various designs, depending on the type of motion and pressure levels. They're made out of different materials, including leather, Buna-N, silicone, neoprene, tetrafluoroethylene (TFE), and Viton. It's very important that the seals be compatible with the type of fluid being used in the system. Synthetic fluids aren't compatible with Buna-N or neoprene seals. Systems using synthetic fluids require Viton, butyl, silicone, or Teflon-type seals. Figure 33 shows a variety of ring seal designs you may encounter when servicing hydraulic equipment.

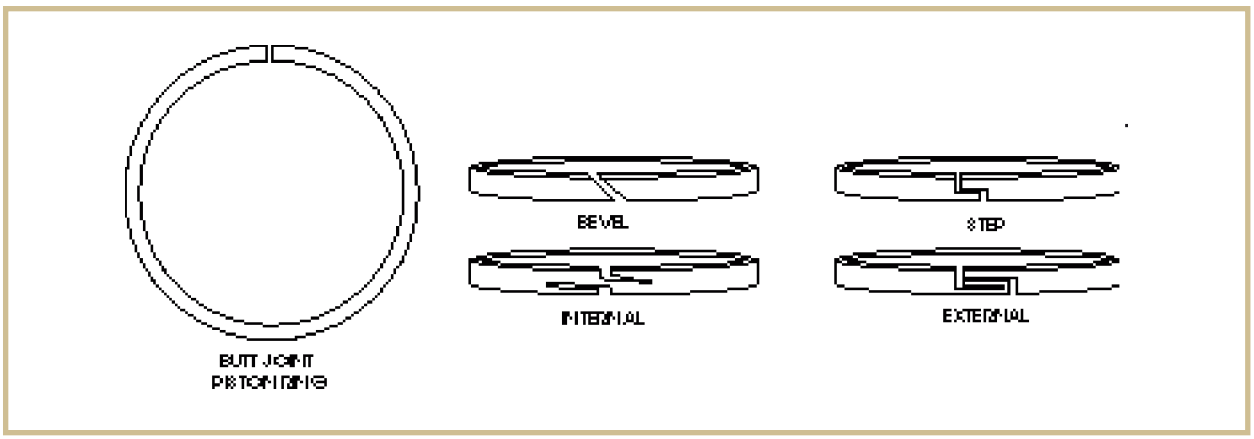

FIGURE 33—You'll encounter different seal designs when servicing hydraulic systems. Seals should be replaced whenever the component is disassembled for service or cleaning.

Wipers are another type of seal that prevent dirt from entering the system when rods are retracted. They don't seal the fluid in the system and don't operate against pressure. They're close-fitting around the shafts and scrape the debris from the surface of the rod as it retracts.

In general, all seals, wipers, and gaskets should be replaced whenever equipment is disassembled for maintenance or service.

Maintaining Fluids

The most important part of any hydraulic system is the fluid itself. For a system to operate as intended, the fluid must be properly maintained. While any fluid has the ability to transmit pressure and energy, modern *hydraulic fluids* are complex compounds that have evolved over many years into today's high-performance varieties. A hydraulic fluid has four functions within the system:

1. To transmit mechanical energy and power
2. To act as a lubricant for moving parts
3. To carry away heat from other parts of the circuit
4. To protect the internal surfaces of components from dirt and contamination

Hydraulic fluid must be properly installed and then changed periodically to maintain top efficiency. Operating conditions and the manufacturers' recommendations will determine how often fluid must be changed. It's very cost-effective to use fluid analysis as a way to find out how the fluid is performing in service and how often it must be replaced. Handling, storage, and disposal of used hydraulic fluid requires care. The Environmental Protection Agency (EPA) considers hydraulic fluid to be a hazardous waste. It must not be mixed with other wastes or industrial by-products. A document that explains about hazardous or potentially hazardous materials is the *Material Safety Data Sheet*, or *MSDS*. This sheet lists information about chemical composition, flammability, and known health hazards of many workplace materials. The United States Federal Government mandates that this information be available to all employees who handle and

transport many types of industrial materials, including hydraulic fluids. You can use this information to decide if the handling and storage procedures in your workplace are adequate.

Your workplace will specify the procedure for labeling and storage of hydraulic fluids and other wastes. Each container must be clearly labeled as to what's inside. There are very severe penalties and fines for mishandling or mislabeling hazardous materials. A common way for fluids to be disposed is through a contracted hazardous waste company that removes the waste and documents the disposal method.

When replacing hydraulic fluid, be sure to clean the top of the fluid container to prevent dirt from entering the system. You should use only clean containers, pipes, and hoses to transfer fluids, and you should use a filter or screen in the fill pipe of the reservoir. When storing hydraulic fluid, make sure each container is labeled properly, and store the containers indoors or in a sheltered location if possible.

The majority of hydraulic system problems can be traced directly to problems with the fluid. Systems won't function properly if the fluid is contaminated with water, air, or particles. The system's operation will also be affected if the fluid *viscosity* isn't correct (viscosity is the resistance to motion). A hydraulic fluid test kit can be used to test even small systems for viscosity, water contamination, and particulate contamination. These tests take only about ten minutes, but can reveal problems that can be corrected before components are damaged.

Once a fluid problem has been identified, it's necessary to find the source of the problem. You can refer to the Table 2 to find some of the possible causes of fluid problems in a system.

The preventative maintenance (PM) schedule will specify when equipment must be serviced and to what extent. All seals should be replaced whenever equipment is disassembled. Whatever the seal type, it's important to replace it with the original type or an approved substitute.

Records must be kept that indicate the date of service, symptoms or problems encountered, and a description of the

Table 2	
COMMON CAUSES OF FLUID POWER SYSTEM FAULTS	
Dirty Fluid	1. Parts not adequately cleaned prior to reassembly 2. Inadequate screening in filler tube 3. Dirty filter 4. Tank gasket not properly installed, or gasket broken 5. Reservoir baffles not working properly 6. Missing or incorrect air breather 7. Dirt allowed into system during servicing
Foaming Fluid	8. Reservoir baffling not sufficient 9. Air leak in suction side of pump 10. Improper fluid additives (anti-foaming) 11. Return line to reservoir not below fluid level; low fluid level 12. Fluid contamination
Fluid Overheating	13. Heat exchanger not functioning properly; water shut off, clogged 14. Operating pressures too high: relief valves always or frequently open, load stalled, excessive fluid viscosity 15. Excessive slippage or internal leakage; low fluid viscosity 16. Reservoir undersized, insufficient baffling 17. Excessive ambient temperature, direct sunlight on equipment 18. Excessive fluid velocity: undersized pipe, tubing, or valving 19. Inadequate cooling air around reservoir 20. System relief valves not set correctly
Particulate Contamination	21. Conductors not properly cleaned when installed 22. Sealing compound or tape allowed to enter the system 23. Dirty, improperly installed screens and/or filters 24. Excessive pressure causing seal extrusion 25. Dirt allowed into conductors or components during servicing 26. Wipers or boots not functioning or improperly installed 27. Rust on exposed actuator components

service performed. During service, all parts should be cleaned and flushed with clean oil prior to assembly. All fittings should be torqued to proper settings to ensure sealing without distortion of fittings or lines.

Troubleshooting

Troubleshooting a hydraulic system requires as much knowledge and skill as designing the system. A knowledge of operating fundamentals of hydraulic systems is necessary, and often so is an understanding of electrical controls. You must know exactly what the function of the machine is, and the role each component plays in that operation. If the system fails completely, you can often find the result of the failure easily, but you must make sure that you fix the cause and not a symptom. For example, if you find the fluid contaminated with particles, you can replace the oil and change the filters. However, you should try to find out where the dirt originated and what allowed its introduction into the system.

Faults that occur from time to time are known as *intermittent faults*. Intermittent faults are the hardest ones to locate because they require close monitoring of the machine over time, or an investigation into the symptoms an operator might describe.

Following are some common trouble spots, their cause and solution. It's not a comprehensive list, and you're sure to find problems that don't seem to fit in any of the categories. As we mentioned before, be sure to document the symptoms, the cause, and the action taken for each machine in your care.

Maintenance personnel are often requested to quiet noisy components, stop leaks, or reactivate a nonfunctioning system. Some of the more common symptoms with suggested check points and possible remedies follow as a troubleshooting guide.

Machine Not Functioning

Step 1: Inspect the pump drive. Check the coupling between the motor and the pump to assure that the two units are properly connected. Check for the correct direction of pump rotation. Determine

if the drive key or one of the coupling elements is sheared. Check the pump for the correct drive speed.

Step 2: Check the fluid level in the reservoir, and make sure the oil-level sight gauge is plugged. Check the oil level reading to see if it shows full when the tank is empty.

Step 3: Remove the pump pressure line. Determine if the pump is delivering any fluid. See if the intake filter is plugged or restricted in any way. Determine whether the suction pipe is leaking or the reservoir breather or air vent is restricted. Check the adjusting screw on a variable-displacement pump to see if it's loose.

Step 4: If the pump delivers some fluid, connect the output to a proven relief valve and direct the flow from this relief valve back to the reservoir. This helps determine if the pump can provide sufficient pressure to operate the machine. Note that a globe-type needle valve may be used in this test if care is exercised. The valve shouldn't be closed down so far that the pump creates pressures that might damage itself or an associated conductor.

Step 5: When pressure lines pass through contained areas in the reservoir or machine housing, check for broken lines, kinks, or other restrictions.

Step 6: Check to see if foreign matter in the relief valve has caused the valve to stick open.

Step 7: Review the circuit to see if an open-center directional-control valve is returning fluid to the tank.

Step 8: When fluid is lost in one branch of a circuit, as indicated by hot lines in one area, a cylinder rod may be disconnected from its piston. A simple check can be made by removing lines from the cylinder and directing compressed air through the inlet port. This may indicate a bypass through the cylinder.

Excessive Pump Noise

Step 1: Check for a vacuum leak in the suction line.

Step 2: Check for vacuum leaks in the pump-shaft packing if the pump is internally drained. Flood the pipe connections to the pump with the fluid being pumped. If the noise stops or reduces momentarily, the point of air entry has been located.

Step 3: Inspect alignment with the drive motor. Misalignment will cause seal and bearing wear and a subsequent high level of operating noise. Excessive misalignment can increase power requirement.

Step 4: Note the drive speed. Check the manufacturer's recommended operating speed to determine if the pump is running too fast. The pump may be unable to fill properly at high rotational speeds without supercharging.

Step 5: Study the manufacturer's specifications relative to wear. High noise level may be an indication of wear.

Step 6: Make certain the fluid conforms to the machine manufacturer's recommendations.

Step 7: Check to see if the relief or unloading valve is set too high. A reliable gauge must be used to check operating pressure. The relief or other pressure-control valve may have been set too high with a damaged gauge. Determine if the system unloading valves, which control pump delivery, are at the desired settings.

Excessively High System Operating Temperatures

Step 1: See if the pump is being operated at higher pressures than required. Reduce the pump pressure to the minimum required for the installation.

Step 2: The pump may not be unloaded during idle periods of the machine cycle. Use an open-center valve, or a two-pressure governor, on a variable-

displacement pump when suitable.

Step 3: Check for insufficient cooling facilities. Install a fluid cooler or increase the reservoir capacity.

Step 4: Check to see if the variable-displacement pump is discharging through the safety or relief valve. Make certain that the valve pressure is at the correct level and that the pump governor is set low enough that fluid isn't lost through the relief or safety valve. (*Note*: A relief or safety valve may not be required with a variable-displacement pump.)

Step 5: Determine if there's excessive spool clearance or if there's slippage in the pump, since either of these conditions may create localized heat. Make any necessary repairs and then check the component independently of the machine. (*Note*: Complete replacement of a pump may be necessary under some circumstances.)

Pressure-Control Valve Noise

Step 1: Does the flow exceed the valve's capabilities? Is the fluid temperature above normal levels? Does the valve piston permit too much fluid to pass through the integral pilot because of surface damage or scored walls?

Step 2: Determine whether the control-chamber orifice within the relief valve is too large for the viscosity of the fluid in the system. This condition often results in a high-pitched whistle, chatter, or both.

Step 3: Are the relief-valve and unloading-valve pressure adjustments set too close to one another? This will cause erratic pressures as the valves alternately control flow.

Step 4: Check for rapid changes in back pressure or internally drained pilot-relief valves, which will create a flutter of the primary valve element.

Step 5: Look for a worn or damaged pump with erratic delivery. The delivery from the pump can become sufficiently unstable, that it prevents the relief

valve from leveling out pulsations.

Step 6: Flutter and noise in the relief valve can be caused by high-frequency shock loading.

Directional-Control Valve Fails to Operate

Step 1: Check pilot pressure to see if it's adequate and stable.

Step 2: Determine whether the solenoid push-pin shifts the pilot spool the correct distance. Is the end worn?

Step 3: Check the electrical signal to the solenoid with a test light. Check to see if voltage is too low or the electrical resistance is excessive.

Step 4: If the supply to the pilot body has an orifice, check the orifice for clogging. Restriction may cause malfunctions.

Step 5: Is the main spool physically jammed?

Step 6: Was the supply pipe wedged into the body to eliminate a leak? Has the resulting distortion affected the moving parts?

Step 7: Make sure that the pilot drain isn't restricted.

Step 8: Check to see if the pilot tank port is connected to a main tank port, in which the pressures are high enough to neutralize the pilot input pressure.

Step 9: Are the solenoids improperly interlocked, so that a signal is provided to both units simultaneously?

Step 10: Has the mounting pad been warped by external heating?

Step 11: Is the fluid medium excessively hot?

Step 12: Determine whether foreign matter in the fluid is causing gummy deposits that may have restricted the orifices or jammed moving parts.

Step 13: Determine if an adequate fluid supply is delivered to actuate the load and still maintain pilot pressure.

Lack of Pressure at the End of Work Stroke

Step 1: Is the pre-fill valve closing completely? Perhaps the fluid directed through the sequence valve is escaping to the reservoir through the pre-fill valve.

Step 2: The piston may be loose or disconnected from the cylinder rod, or the piston packing may be worn and permitting loss of fluid.

Step 3: Is the cylinder wall scored at the end of the stroke?

Step 4: Is the unloading or regenerative crossover valve functioning? Improper functioning will eliminate maximum force in the regenerative circuit. Is the valve leaking?

Unsatisfactory Machine Feed Rates

Step 1: The feed pressure may be lower than the value of the compensation spring. This delays the compensator at the rest position until the pressure drop across the orifice is high enough to actuate the spring-offset spool.

Step 2: The pressure compensator in a flow-control valve may be nonfunctional, so that the flow through the orifice isn't restricted. Since the feed rate is a function of load and pressure, there's no limiting of pressure drop across the orifice when the compensator is inoperative in the open position.

Step 3: The pressure compensator may be restricting flow. There may be binding, foreign matter inside, a valve body warped from pipe strain, or the tapered pipe threads may be jamming the spool.

Step 4: The entire valve may be warped by being fastened to a warped or distorted subplate.

Step 5: Determine if alternate flow paths have been created in the circuit. These may include clearance flow in a diversion valve, clearance flow through piston rings, or other components that allow uncompensated flow paths back to the reservoir.

Foam in Petroleum-Based Fluids

Step 1: The baffling may be inadequate or improperly positioned.

Step 2: Determine if the return-to-tank line is above the fluid level. The return pipe may be broken or the line may have been omitted between a bulkhead coupling and the bottom of the tank after the tank was cleaned.

Step 3: The fluid may be contaminated or worn out.

Step 4: The pump suction line or shaft seal may be leaking

Step 5: The discharge lines may be too close to the pump suction lines.

Foreign Matter in the Fluid

Step 1: The components and overall system may not have been properly cleaned after servicing.

Step 2: All rust and pipe scale may not have been completely removed from the system.

Step 3: Pipe dope or tape sealer may have been allowed to get inside the fittings, and subsequently circulated throughout the system.

Step 4: Determine whether the filter is continually bypassing because of a need for cleaning or replacement.

Step 5: Check for inadequate or damaged screening in the fill pipe.

Step 6: See if the air intake or breather has been left off. Perhaps no air breather was initially provided, or there may be inadequate protection of the air cleaner.

Step 7: The tank gasket may not be properly installed, or the cover may be warped.

Step 8: Determine if frayed ends of a packing may have come loose.

Step 9: Check to see if the static seals have been extruded into the fluid lines because of excessively high

pressures. Damaged or omitted backup rings may permit the seal to flake or extrude into fluid lines.

Step 10: Maintenance personnel may have created the condition by not protecting the system components properly while doing repair work—open lines may have been left unprotected.

Step 11: Check for burrs inside the piping and components.

Step 12: Determine whether the magnetic chip-collector devices have been cleaned at suitable intervals. Perhaps the collected materials have migrated because of vibration within the system.

Condensation in the Reservoir

Step 1: The cooling coils may be improperly located in the reservoir. The coil surface must always be below the fluid level.

Step 2: Are the water lines fastened directly against a hot tank? If so, vapor condensation within the tank can be expected. Insulation or rerouting is therefore essential.

Step 3: Perhaps the cooling fluids are splashing into a tank with an improperly installed gasket, or the fill pipes may have been left open.

Step 4: The can used to store and replace the fluid in the tank may not have been clean, or dirt or moisture may have contaminated the fluid if the can was unprotected.

Step 5: Extremes of temperature in certain geographical locations may cause condensation in the fluid power reservoir.

Step 6: The drain may not be providing complete elimination of water because it's not positioned at the lowest point in the tank.

Step 7: The operating temperatures of the system may be too low to evaporate the moisture from the fluid.

Overloaded Drive Motor or Engine

Step 1: Perhaps the drive hasn't been properly sized to handle the pump load.

Step 2: Has the pressure or volume output levels of a variable pump been adjusted beyond the drive capabilities? If so, reduce the pressure or volume to compatible levels.

Step 3: Determine if there's excessive internal circuit leakage by checking for hot spots and making any needed repairs.

Slow Output-Device Operation

Step 1: Are the machine guides set too tightly for the machine to operate at full speed?

Step 2: Check the output of the pump, since wear may be reducing the pump flow.

Step 3: Check for an internal leak that may be indicated by a hot pipe or localized heat on a component.

Step 4: Check the setting of the unloading valves. Is the high-volume pump cutting out too soon? Are the unloading valves closing completely?

Step 5: See if the pre-fill valve opens far enough. Determine whether the pressure at a single-acting actuator is too low to create an adequate vacuum on the pre-fill valve for full-speed operation. Perhaps the pre-fill valve needs positive pressure piloting.

Step 6: If the machine is a gravity drop press, check to see if the packing glands are too tight.

Step 7: Determine whether the acceleration or deceleration valve spool is stuck part way. This condition will restrict rapid movement.

Uncontrolled Cylinder or Motor Movement During Idle Time

Step 1: A conventional single-rod cylinder will cause creep if the four-way valve is an open-center type and

there's a restriction in the tank port. Instead, use a tandem-type valve, or have one cylinder port and pressure dumped to the tank while the other cylinder port is blocked. This modification prevents undesired movement.

Step 2: Check to see if the covers have been left off solenoids, and iron dust and chips have collected in the magnetic field. If so, the plunger can't complete its stroke and the solenoid usually burns out.

Step 3: Perhaps simultaneous signals are sent to both solenoids of a double-solenoid valve. If so, at least one of the solenoids will be unable to complete its stroke and will burn out. Interlock the electrical signals so this condition can't exist.

Step 4: Check the push-pin for wear. If it's not long enough to actuate the valve, replace it with a new pin.

Step 5: Examine the solenoid leads. Are they damaged, causing a short or open circuit? Effects of vibration may have worn insulation from the leads.

Step 6: Are the electrical feed lines to the solenoid too light to carry the required electrical current? Feed lines for a direct-current-operated solenoid may create too much voltage drop.

Step 7: Look for tight spools or other sticky valve parts that can prevent the solenoid from completing its stroke, a potential cause of solenoid burnout.

Step 8: Perhaps a replacement spring is too heavy. If so, it may overload the solenoid so that actuation is marginal.

Step 9: Check for dirty or burned contacts that may be limiting the flow of current to the solenoid.

Step 10: Signal lights should be installed, preferably at the solenoid, to indicate signal-voltage at the coil. This signal can help quickly identify problems within the basic electrical circuit rather than the fluid power portion.

Step 11: Consider the use of solenoid protectors to provide overload cutout, or fuses and suitable indicating devices. Units of this nature that are marketed contain all the necessary functions to ensure complete protection of solenoids.

Synthetic-Fluid Problems

Step 1: The wrong choice of seals may result in dissolved elastomers that bind the circuit elements.

Step 2: Protective coverings in contact with certain fluids can break down, causing sludge deposits on filters, in orifices, and around seals.

Step 3: Electrolytic action can be expected with some metals such as zinc or cadmium.

Step 4: Heavy sludge formations may result from improper mixtures.

Step 5: Elevated temperatures adversely affect some fluids, particularly the aqueous-based ones, by causing water to evaporate and changing the fluid viscosity. Test the fluid viscosity frequently.

Check Your Learning 3

1. The majority of hydraulic system failure can be traced to problems in the

   a. conductors.
   b. valves.
   c. actuators.
   d. fluid.

2. A gasket on a reservoir is a type of _____ seal.

3. Intermittent faults in moving hydraulic components are ones that occur from _____.

4. A possible cause of excessive fluid temperature is _____

   a. rust on exposed actuator parts.
   b. an air leak in the suction side of the pump.
   c. an improperly installed gasket on the reservoir.
   d. an undersized reservoir.

5. Excessive pump noise can be a result of

   a. a vacuum leak.
   b. excessive fluid temperature.
   c. dirty oil.
   d. an oversized reservoir.

Check your answers with those on page 71.

Answers

Check Your Learning Answers 1

1. accumulator
2. c
3. 0.98
4. c
5. mechanical efficiency
6. 4.2
7. Piston motors
8. 20 ft/sec.
9. c
10. Steel tubing
11. 2429
12. 160
13. a
14. d

Check Your Learning Answers 2

1. Hydraulic fuses
2. manifold
3. feedback
4. Electrohydraulic
5. Limit
6. temperature

Check Your Learning Answers 3

1. d
2. static
3. time to time
4. d
5. a