P0068-MANIFOLD PRESSURE/THROTTLE POSITION CORRELATION

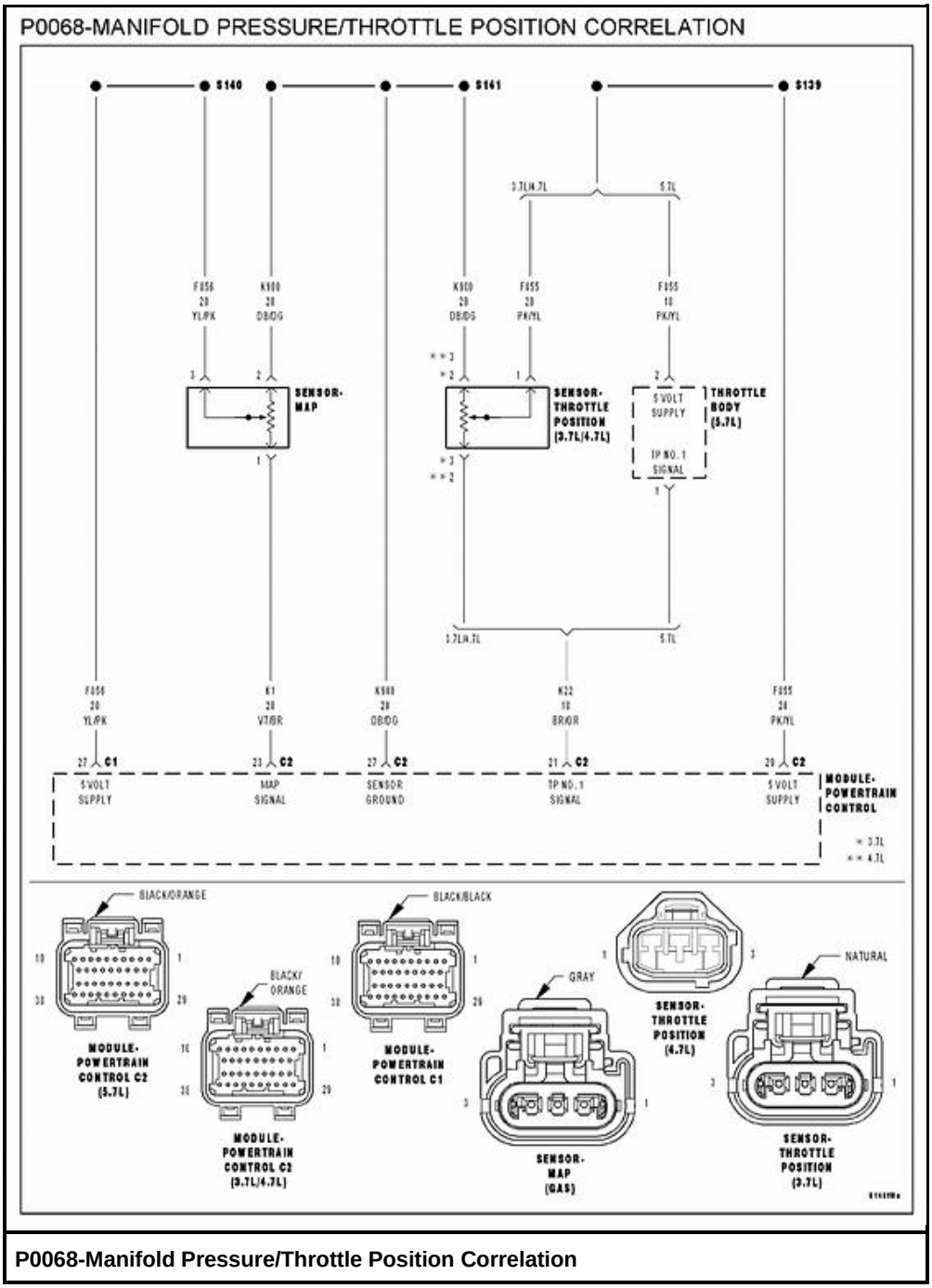

P0068-Manifold Pressure/Throttle Position Correlation

Theory of Operation

This DTC sets when an unexpected high intake manifold air flow condition exists that can lead to increased engine speed and puts the NGC into a High Air flow Protection limiting mode. The High Air flow Protection feature includes RPM limits for when a Throttle and/or MAP sensor limp-in fault is present.

WHEN MONITORED

During all drive modes

SET CONDITION

If vacuum drops **below 1.5 inches Hg** with engine RPM **greater than 2000 RPM** and closed throttle. One Trip Fault.Three good trips to turn off the MIL.

POSSIBLE CAUSES

- Vacuum leak
- Resistance in the (F856) **5-volt** supply circuit
- (F856) **5-volt** supply circuit shorted to ground
- Resistance in the (K1) map signal circuit
- (K1) Map signal circuit shorted to ground
- Resistance in the (F855) **5-volt** supply circuit
- (F855) **5-volt** supply circuit shorted to ground
- Resistance in the (K22) TP sensor No.1 signal circuit
- (K22) TP Sensor No.1 Signal Circuit Shorted To Ground
- Resistance in the (K900) sensor ground circuit
- Map sensor
- Throttle position sensor
- PCM

Always perform the Pre-Diagnostic Troubleshooting procedure before proceeding. See: Computers and Control Systems > Initial Inspection and Diagnostic Overview > Initial Inspection

DIAGNOSTIC TEST

1. ACTIVE DTC

NOTE:

- Diagnose any TP Sensor or MAP Sensor component DTCs before continuing.
- If the P0501 - No Vehicle Speed Signal is set long with this DTC, refer to the P0501 diagnostics before continuing.
- The throttle plate and linkage should be free from binding and carbon build up.
- Make sure the throttle plate is at the idle position.

Ignition on, engine not running.
With a scan tool, read DTCs.

Q: Is the DTC active at this time?

YES: Go To 2
NO: Refer to the INTERMITTENT CONDITION Diagnostic Procedure. See: Computers and Control Systems > Component Tests and General Diagnostics > Intermittent Condition Perform the POWERTRAIN VERIFICATION TEST. See: A L L Diagnostic Trouble Codes (DTC) > Verification Tests > Powertrain Verification Test

2. VACUUM LEAK

NOTE:

- This code is enabled on engines with a plastic intake manifold and is intended to shut down the engine if a large crack occurs.
- A large vacuum leak is most likely the cause of this DTC.

Inspect the Intake Manifold for leaks and cracks.
Inspect the Power Brake Booster for any vacuum leaks.
Inspect the PCV system for proper operation and vacuum leaks.

Inspect the throttle plate to see if it is bent and will close entirely, if it is bent it may need to be replaced.

Inspect the MAP Sensor for proper installation.
Verify the engine is free from any mechanical failures.

Q: Were any vacuum leaks found?

YES: Repair the vacuum leak as necessary. Perform the POWERTRAIN VERIFICATION TEST. See: A L L Diagnostic Trouble Codes (DTC) > Verification Tests > Powertrain Verification Test
NO: Go To 3

3. MAP SENSOR OPERATION

Start the engine.

With a scan tool, monitor the MAP Sensor voltage.
Snap the throttle.

Q: Does the MAP Sensor voltage vary from below 2.0 volts at idle to above 3.5 volts at wide open throttle?

YES: Go To 4
NO: Go To 11

4. TP SENSOR OPERATION
Ignition on, engine not running.

With a scan tool, monitor the TP Sensor voltage while slowly pressing the throttle pedal from closed to wide open throttle.

Q: Does voltage start at approximately 0.8 of a volt and go above 3.5 volts with a smooth transition?

YES: Refer to the INTERMITTENT CONDITION Diagnostic Procedure. See: Computers and Control Systems > Component Tests and General Diagnostics > Intermittent Condition Perform the POWERTRAIN VERIFICATION TEST. See: A L L Diagnostic Trouble Codes (DTC) > Verification Tests > Powertrain Verification Test
NO: Go To 5

5. EXCESSIVE RESISTANCE IN THE (F855) 5-VOLT SUPPLY CIRCUIT

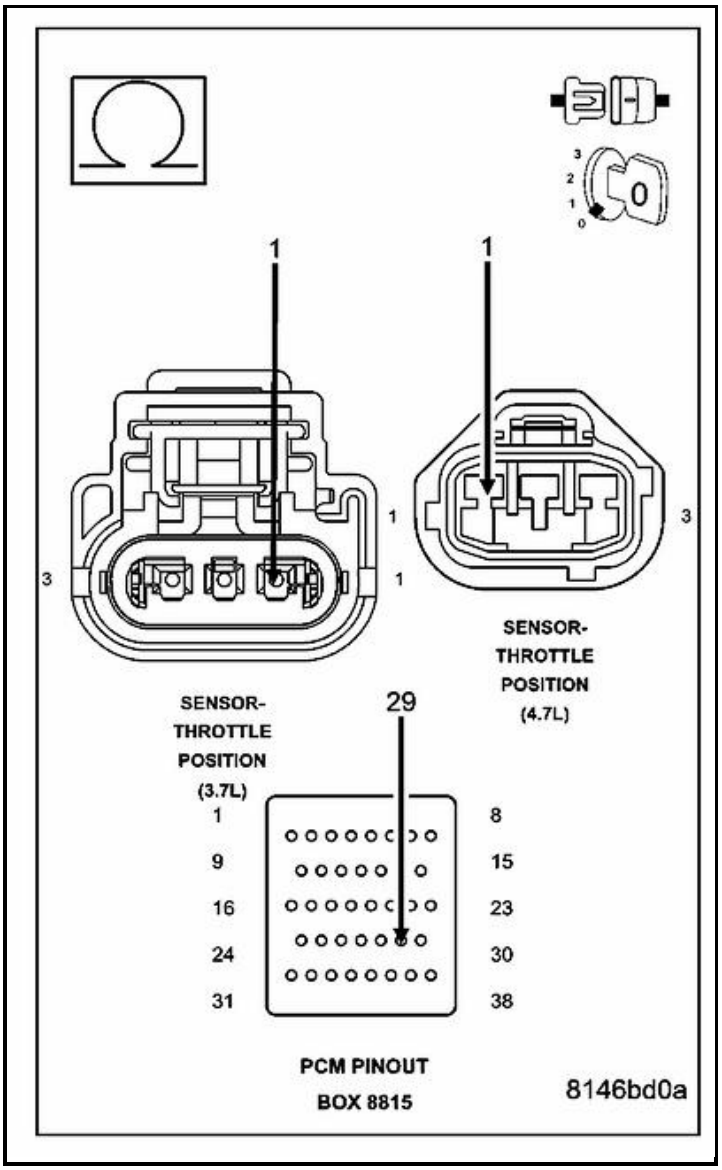

Turn the ignition off.

Disconnect the TP Sensor harness connector.

Disconnect the C2 PCM harness connector.

CAUTION: Do not probe the PCM harness connectors.Probing the PCM harness connectors will damage the PCM terminals resulting in poor terminal to pin connection. Install Miller Special Tool #8815 to perform diagnosis.

Measure the resistance of the (F855) **5-volt** Supply circuit from the TP Sensor harness connector to the appropriate terminal of special tool #8815.

Q: Is the resistance below 5.0 ohms?

YES: Go To 6
NO: Repair the excessive resistance in the (F855) **5-volt** Supply circuit. Perform the POWERTRAIN VERIFICATION TEST. See: A L L Diagnostic Trouble Codes (DTC) > Verification Tests > Powertrain Verification Test

6. (F855) 5-VOLT SUPPLY CIRCUIT SHORTED TO GROUND

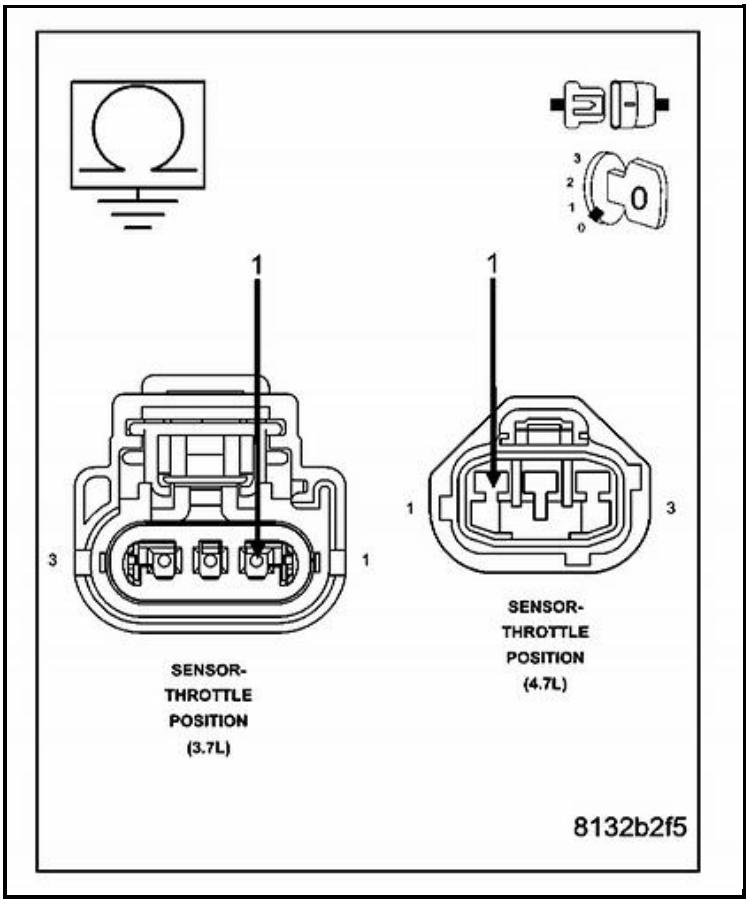

Measure the resistance between ground and (F855) **5-volt** Supply circuit in the TP Sensor harness connector.

Q: Is the resistance below 100 ohms?

YES: Repair the short to ground in the (F855) **5-volt** Supply circuit. Perform the POWERTRAIN VERIFICATION TEST. See: A L L Diagnostic Trouble Codes (DTC) > Verification Tests > Powertrain Verification Test
NO: Go To 7

7. THROTTLE POSITION SENSOR

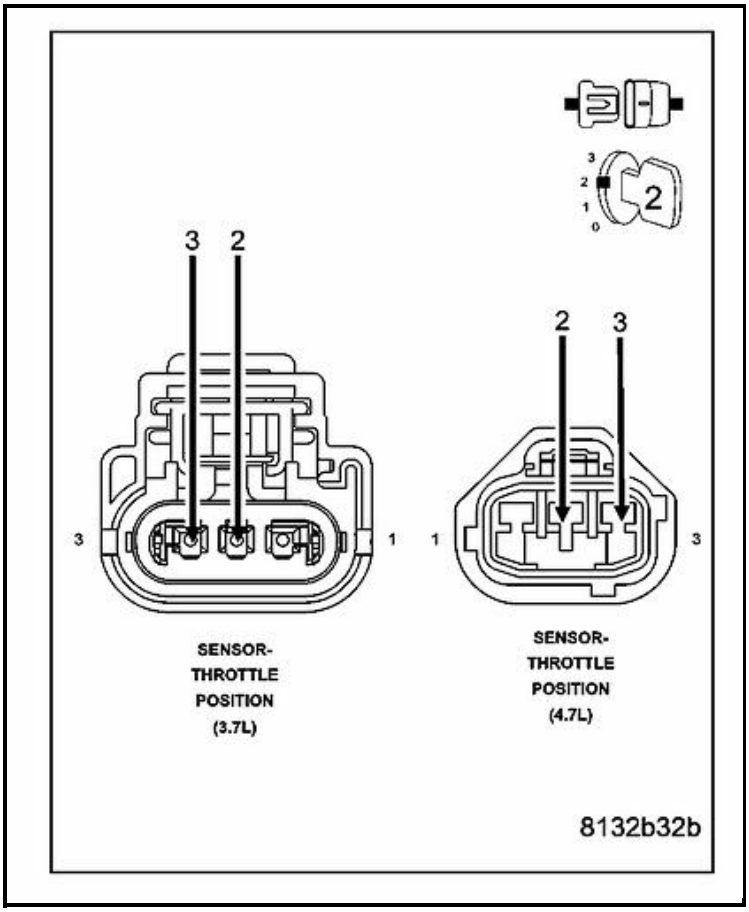

Connect the C2 PCM harness connector.
Ignition on, engine not running.
With a scan tool, monitor the TP Sensor voltage.

Connect a jumper wire between the (K22) TP Sensor No.1 Signal circuit and the (K900) Sensor ground circuit in the Sensor harness connector.

Q: Does the TP Sensor voltage change from approximately 4.9 volts to below 0.5 of a volt with the jumper wire installed?

YES: Replace the Throttle Position Sensor. Perform the POWERTRAIN VERIFICATION TEST. See: A L L Diagnostic Trouble Codes (DTC) > Verification Tests > Powertrain Verification Test
NO: Go To 8

NOTE: Remove the jumper wire before continuing.

8. EXCESSIVE RESISTANCE IN THE (K22) TP No.1 SIGNAL CIRCUIT

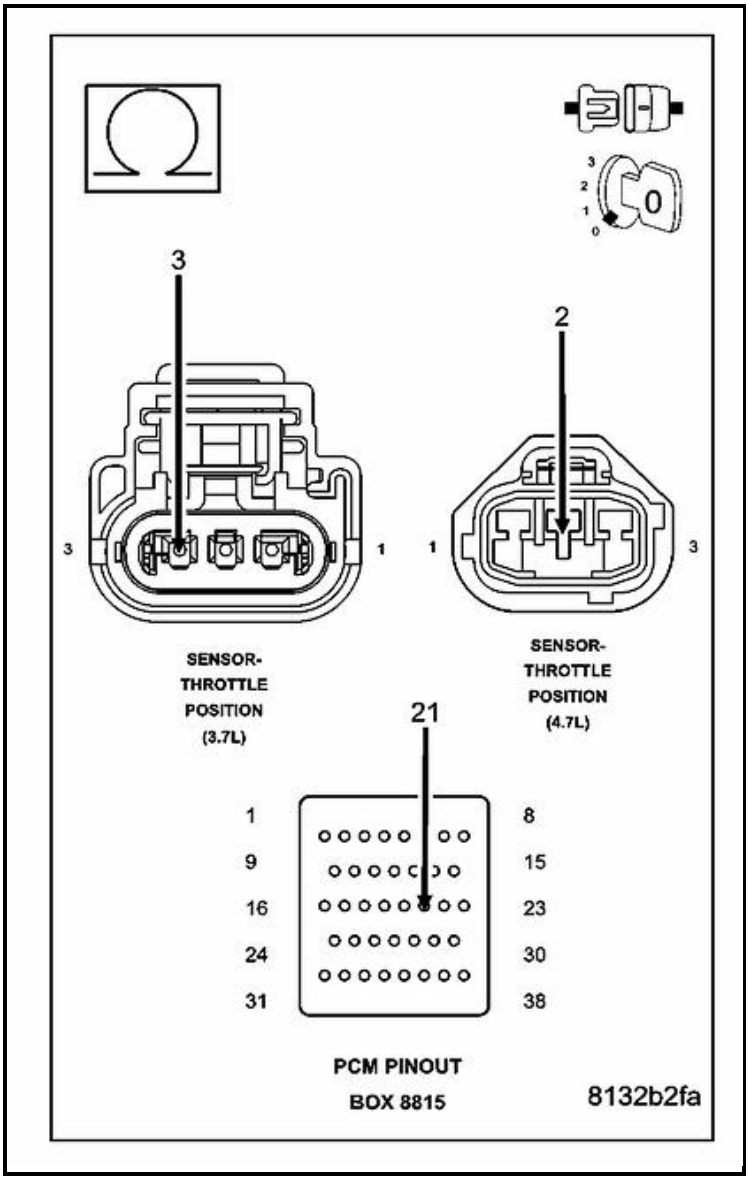

Turn the ignition off.

Disconnect the C2 PCM harness connector.

CAUTION: Do not probe the PCM harness connectors. Probing the PCM harness connectors will damage the PCM terminals resulting in poor terminal to pin connection. Install Miller Special Tool #8815 to perform diagnosis.

Measure the resistance of the (K22) TP Sensor No.1 Signal circuit from the TP Sensor harness connector to the appropriate terminal of special tool #8815.

Q: Is the resistance below 5.0 ohms?

YES: Go To 9
NO: Repair the excessive resistance in the (K22) TP Sensor No.1 Signal circuit. Perform the POWERTRAIN VERIFICATION TEST. See: A L L Diagnostic Trouble Codes (DTC) > Verification Tests > Powertrain Verification Test

9. (K22) TP SENSOR No.1 SIGNAL CIRCUIT SHORTED TO GROUND

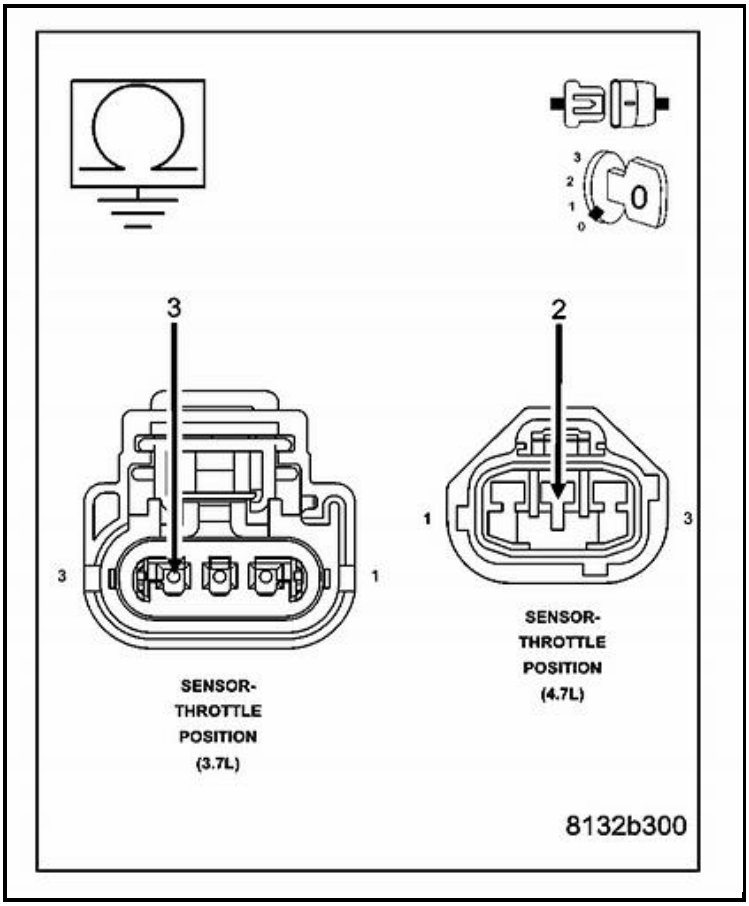

Measure the resistance between ground and the (K22) TP Sensor No.1 Signal circuit in the TP Sensor harness connector.

Q: Is the resistance below 100 ohms?

YES: Repair the short to ground in the (K22) TP Sensor No.1 Signal circuit. Perform the POWERTRAIN VERIFICATION TEST.
See: A L L Diagnostic Trouble Codes (DTC) > Verification Tests > Powertrain Verification Test
NO: Go To 10

10.EXCESSIVE RESISTANCE IN THE (K900) SENSOR GROUND CIRCUIT

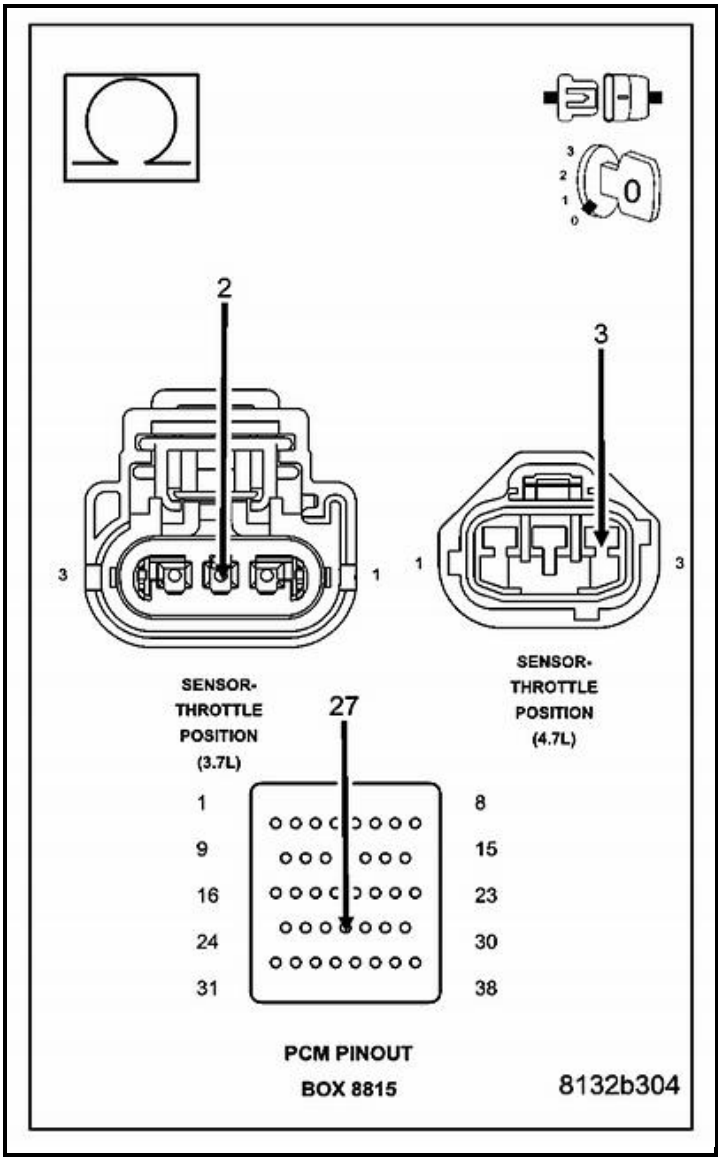

CAUTION: Do not probe the PCM harness connectors. Probing the PCM harness connectors will damage the PCM terminals resulting in poor terminal to pin connection. Install Miller Special Tool #8815 to perform diagnosis.

Measure the resistance of the (K900) Sensor ground circuit from the TP Sensor harness connector to the appropriate terminal of special tool #8815.

Q: Is the resistance below 5.0 ohms?

YES: Go To 17
NO: Repair the excessive resistance in the (K900) Sensor ground circuit. Perform the POWERTRAIN VERIFICATION TEST. See: A L L Diagnostic Trouble Codes (DTC) > Verification Tests > Powertrain Verification Test

11.EXCESSIVE RESISTANCE IN THE (F856) 5-VOLT SUPPLY CIRCUIT

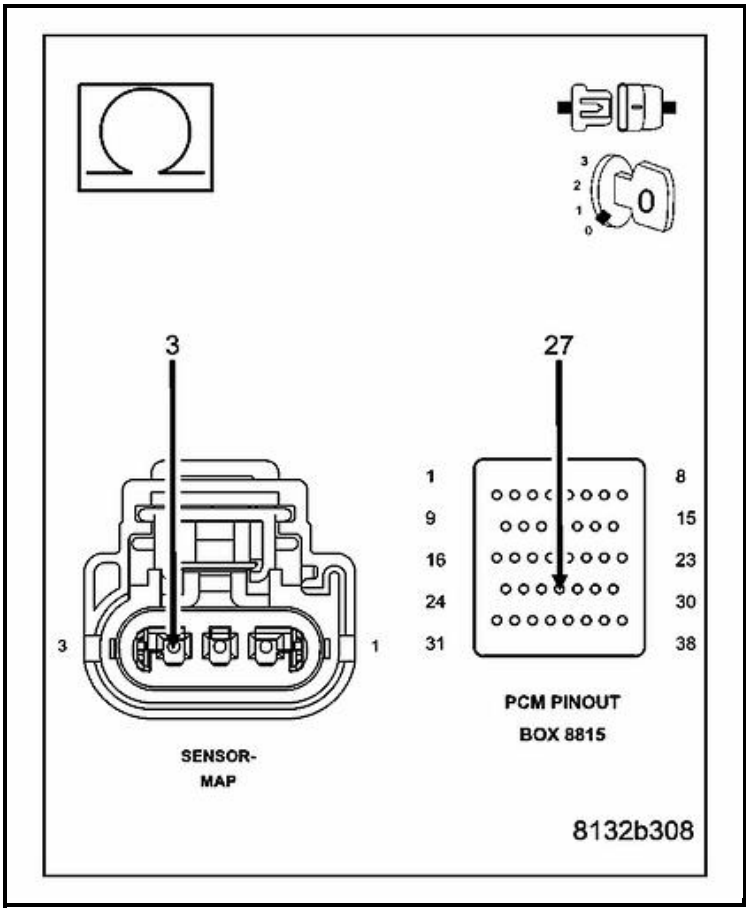

Turn the ignition off.
Disconnect the MAP Sensor harness connector.
Disconnect the C1 PCM harness connector.

CAUTION: Do not probe the PCM harness connectors. Probing the PCM harness connectors will damage the PCM terminals resulting in poor terminal to pin connection. Install Miller Special Tool #8815 to perform diagnosis.

Measure the resistance of the (F856) **5-volt** Supply circuit from the MAP Sensor harness connector to the appropriate terminal of special tool #8815.

Q: Is the resistance below 5.0 ohms?

YES: Go To 12
NO: Repair the excessive resistance in the (F856) **5-volt** Supply circuit. Perform the POWERTRAIN VERIFICATION TEST. See: A L L Diagnostic Trouble Codes (DTC) > Verification Tests > Powertrain Verification Test

12.(F856) 5-VOLT SUPPLY CIRCUIT SHORTED TO GROUND

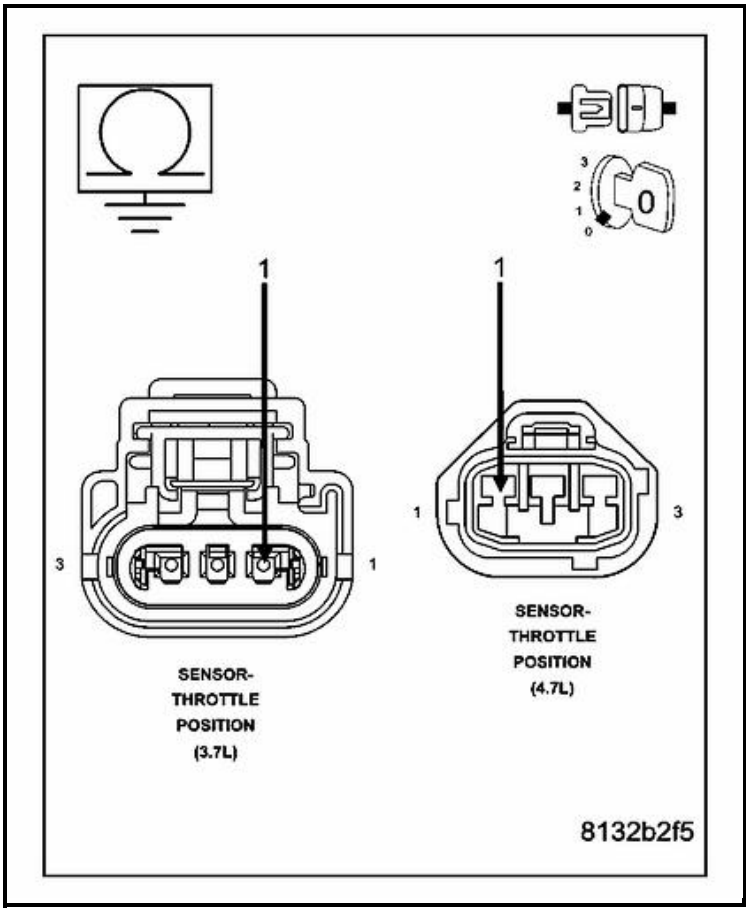

Measure the resistance between ground and the (F856) **5-volt** Supply circuit in the MAP Sensor harness connector.

Q: Is the resistance above 100k ohms?

YES: Go To 13
NO: Repair the short to ground in the (F856) **5-volt** Supply circuit. Perform the POWERTRAIN VERIFICATION TEST. See: A L L Diagnostic Trouble Codes (DTC) > Verification Tests > Powertrain Verification Test

13.MAP SENSOR

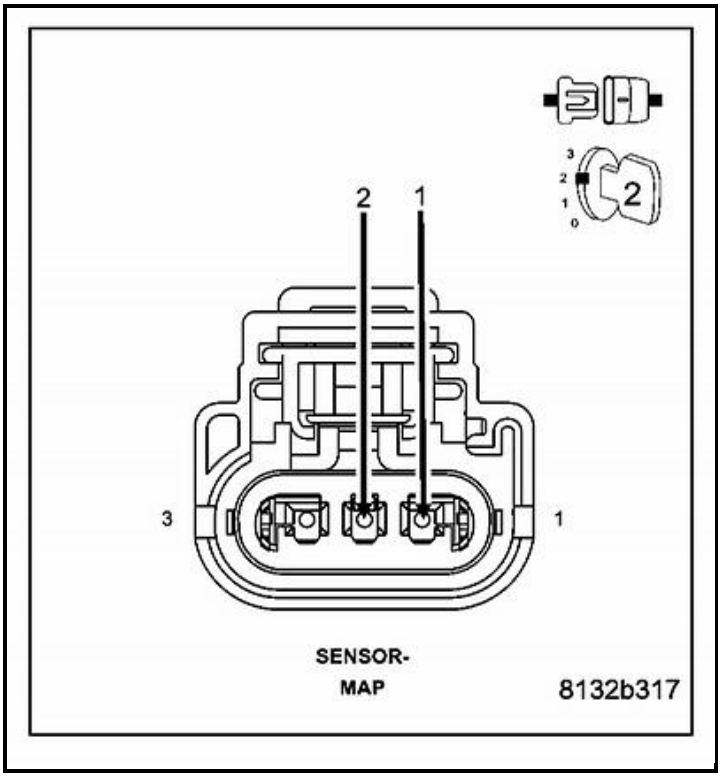

Turn the ignition off.
Connect the C1 PCM harness connector.
Ignition on, engine not running.
With a scan tool, monitor the MAP Sensor voltage.

Connect a jumper wire between the (K1) MAP Signal circuit and the (K900) Sensor ground circuit.

Q: Does the scan tool display MAP voltage from approximately 4.9 volts to below 0.5 of a volt with the jumper wire installed?

YES: Replace the MAP Sensor. Perform the POWERTRAIN VERIFICATION TEST. See: A L L Diagnostic Trouble Codes (DTC) > Verification Tests > Powertrain Verification Test
NO: Go To 14

NOTE: Remove the jumper wire before continuing.

14.EXCESSIVE RESISTANCE IN THE (K1) MAP SIGNAL CIRCUIT

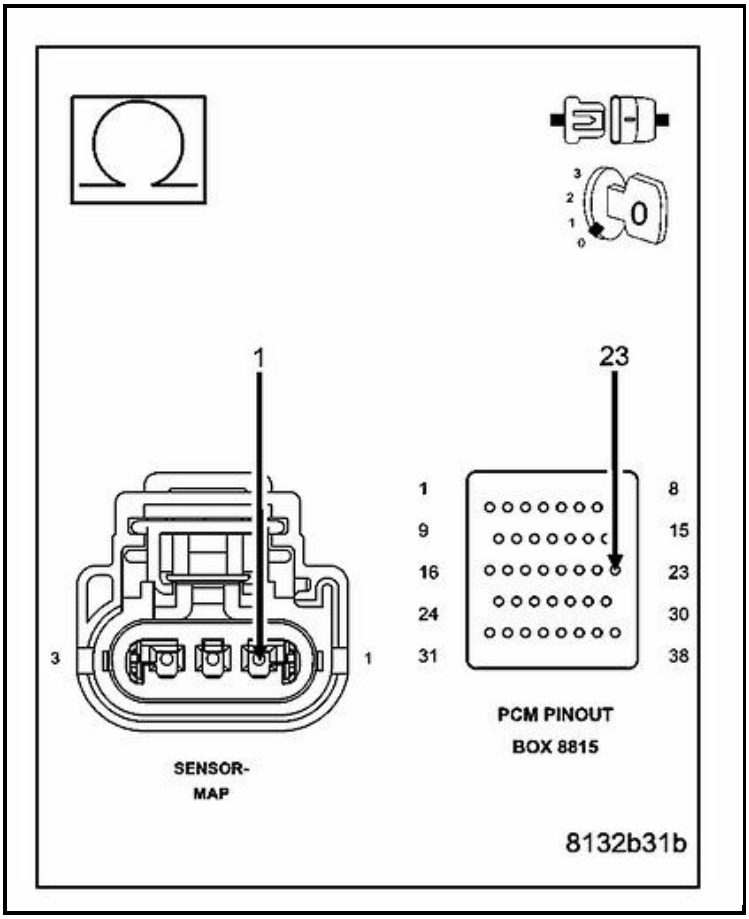

Turn the ignition off.
Disconnect the C2 PCM harness connector.

CAUTION: Do not probe the PCM harness connectors. Probing the PCM harness connectors will damage the PCM terminals resulting in poor terminal to pin connection. Install Miller Special Tool #8815 to perform diagnosis.

Measure the resistance of the (K1) MAP Signal circuit from the Map Sensor harness connector to the appropriate terminal of special tool #8815.

Q: Is the resistance below 5.0 ohms?

YES: Go To 15
NO: Repair the excessive resistance in the (K1) MAP Signal circuit. Perform the POWERTRAIN VERIFICATION TEST. See: A L L Diagnostic Trouble Codes (DTC) > Verification Tests > Powertrain Verification Test

15.(K1) MAP SIGNAL CIRCUIT SHORTED TO GROUND

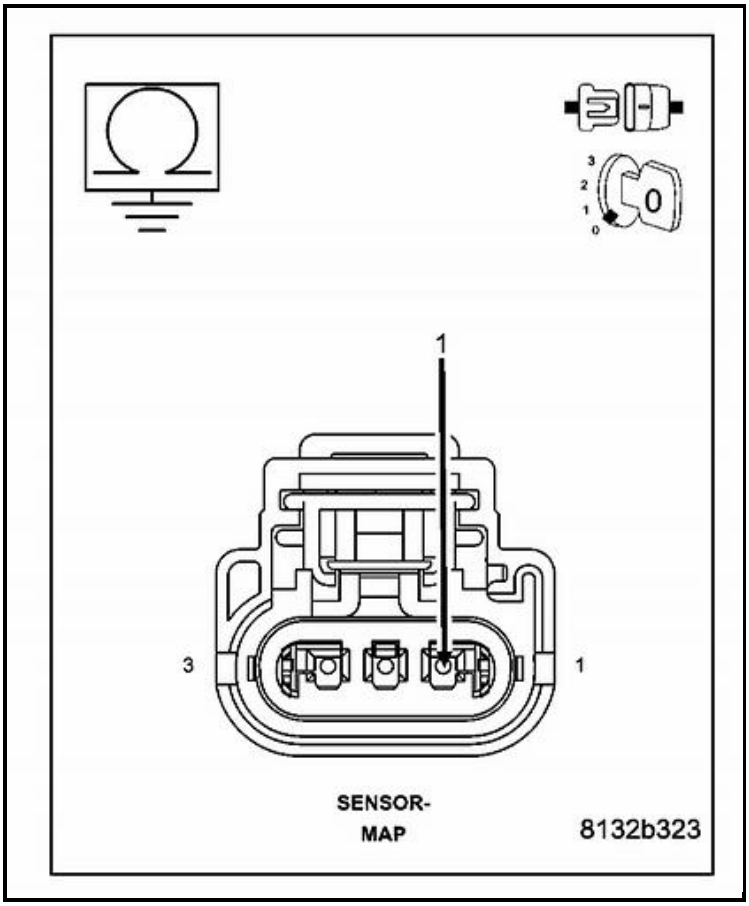

Measure the resistance between ground and the (K1) MAP Signal circuit in the MAP Sensor harness connector.

Q: Is the resistance below 100 ohms?

YES: Repair the short to ground in the (K1) MAP Signal circuit. Perform the POWERTRAIN VERIFICATION TEST. See: A L L Diagnostic Trouble Codes (DTC) > Verification Tests > Powertrain Verification Test

NO: Go To 16

16.EXCESSIVE RESISTANCE IN THE (K900) SENSOR GROUND CIRCUIT

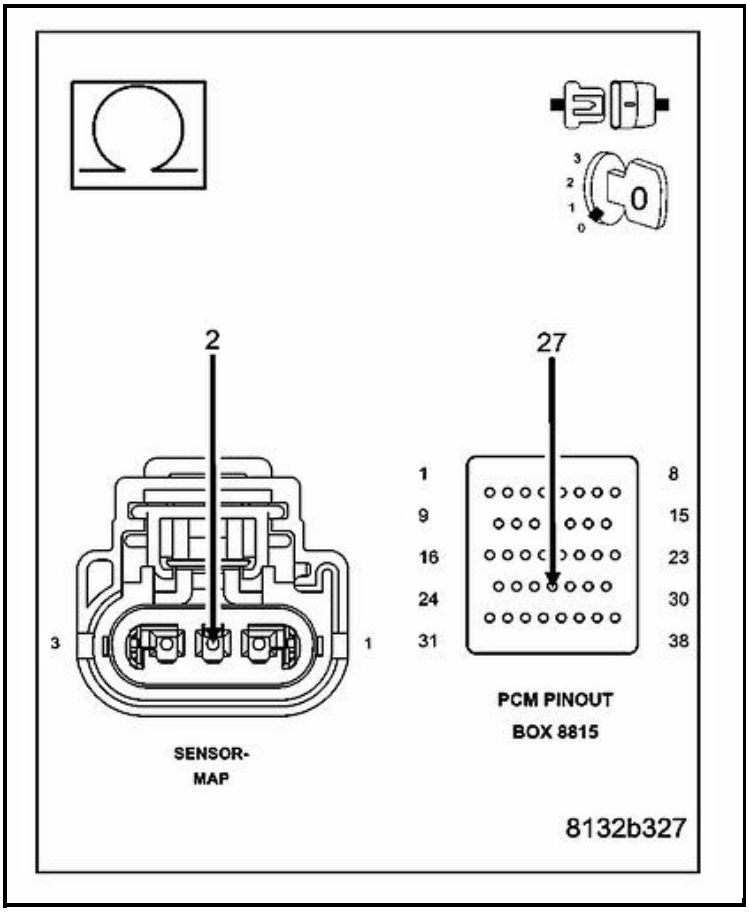

CAUTION: Do not probe the PCM harness connectors. Probing the PCM harness connectors will damage the PCM terminals resulting in poor terminal to pin connection. Install Miller Special Tool #8815 to perform diagnosis.

Measure the resistance of the (K900) Sensor ground circuit from the MAP Sensor harness connector to the appropriate terminal of special tool #8815.

Q: Is the resistance below 5.0 ohms?

YES: Go To 17
NO: Repair the excessive resistance in the (K900) Sensor ground circuit. Perform the POWERTRAIN VERIFICATION TEST. See: A L L Diagnostic Trouble Codes (DTC) > Verification Tests > Powertrain Verification Test

17.PCM

NOTE: Before continuing, check the PCM harness connector terminals for corrosion, damage, or terminal push out. Repair as necessary.

Using the schematics as a guide, inspect the wire harness and connectors. Pay particular attention to all Power and Ground circuits.

Q: Were there any problems found?

YES: Repair as necessary. Perform the POWERTRAIN VERIFICATION TEST. See: A L L Diagnostic Trouble Codes (DTC) > Verification Tests > Powertrain Verification Test
NO: Replace and program the Powertrain Control Module per Service Information. Perform the POWERTRAIN VERIFICATION TEST. See: A L L Diagnostic Trouble Codes (DTC) > Verification Tests > Powertrain Verification Test

© 2016 ALLDATA, LLC. All Rights Reserved. (Version 2.0.13801)