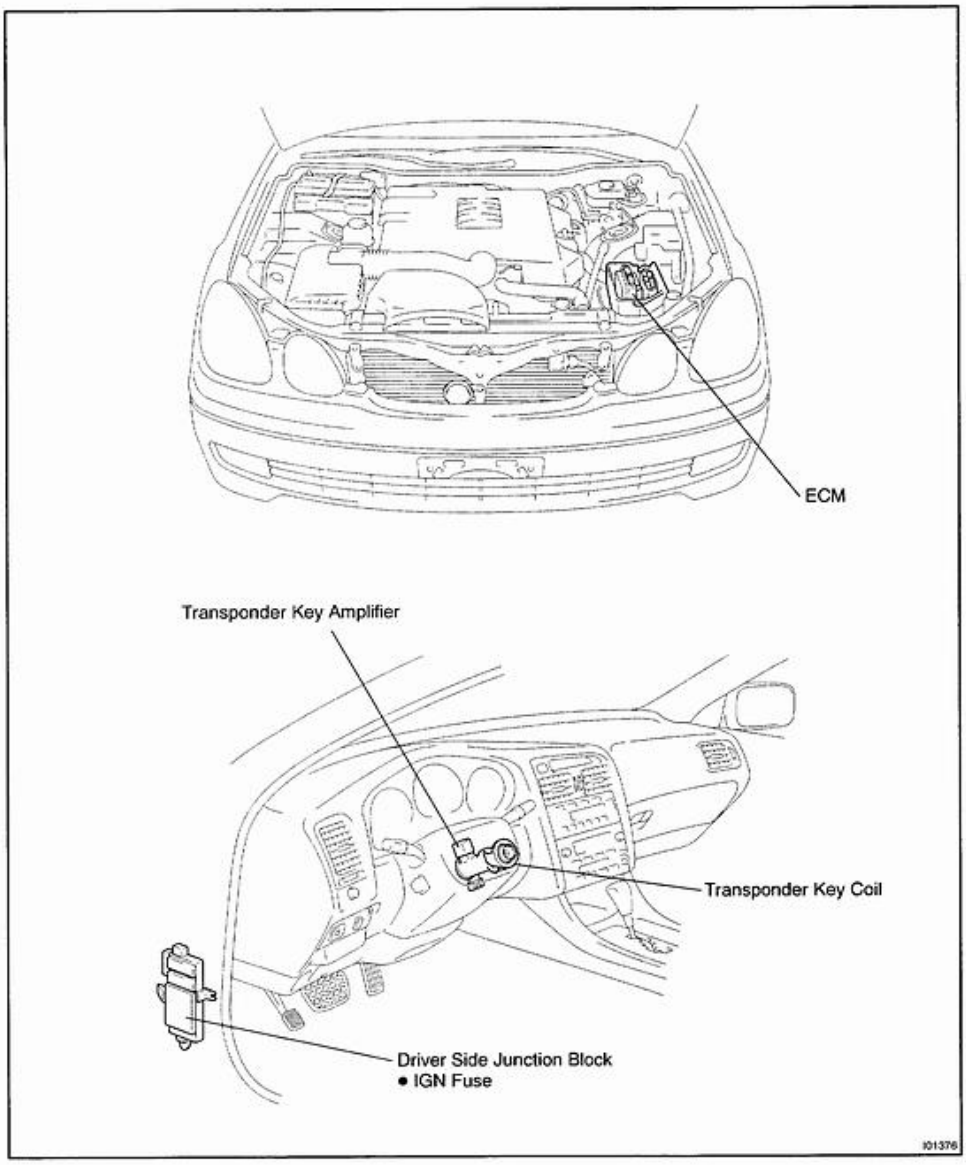

Engine Immobilizer System

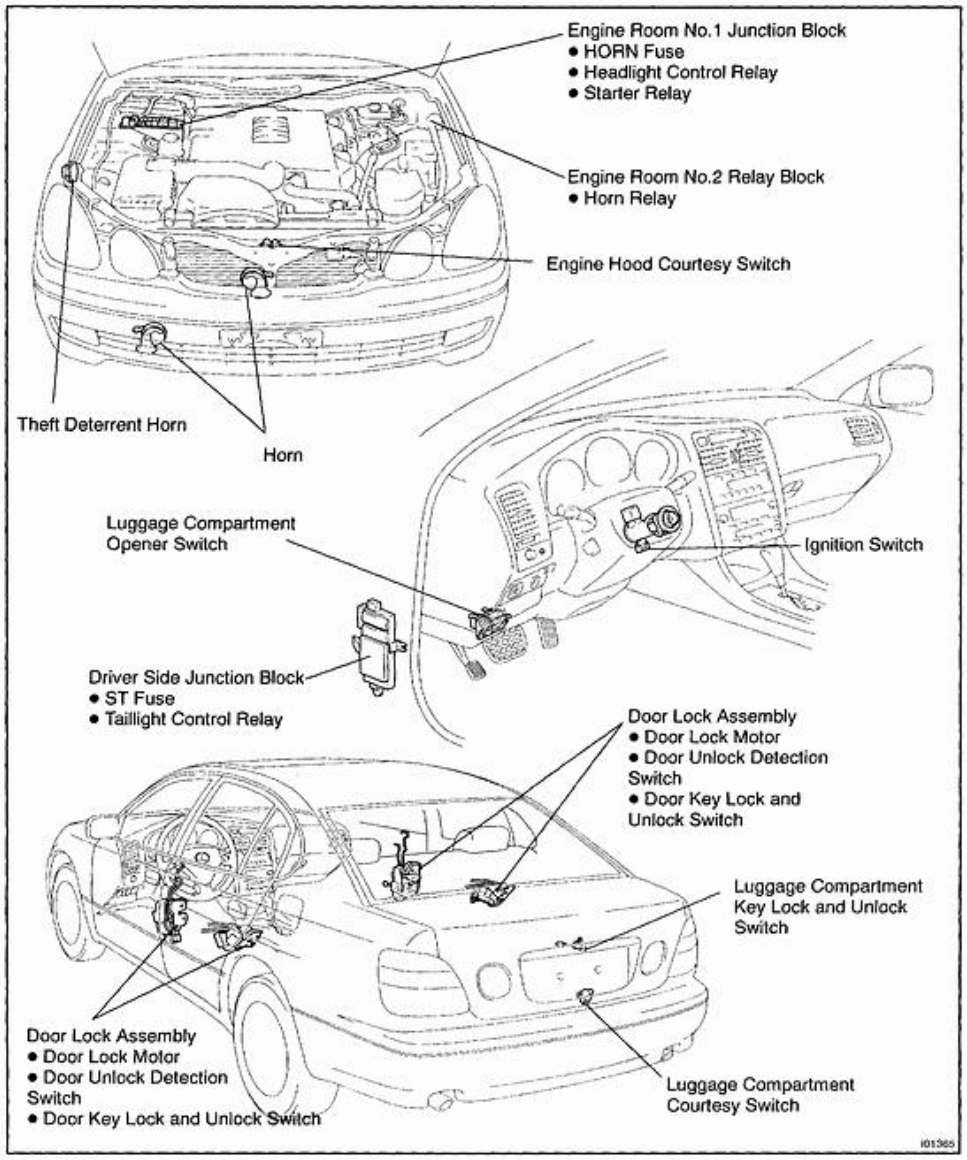

Theft Deterrent System

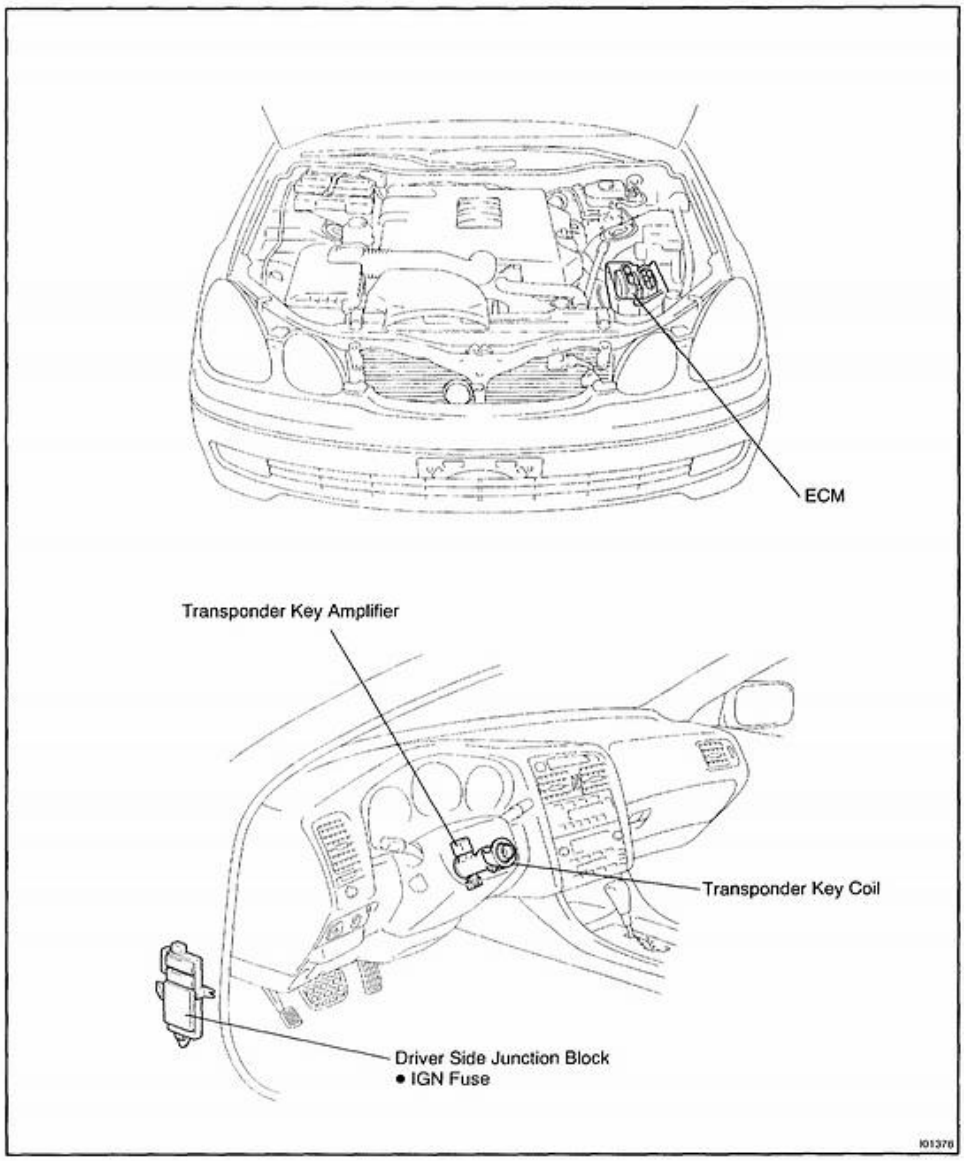

Engine Immobiliser System

© 2015 ALLDATA, LLC. All Rights Reserved. (Version 2.0.13792)