Center Console Rear Trim Removal/Installation

Special Tools Required

- KTC Trim Tool Set SOJATP2014
  *Available through the Acura Tool and Equipment Program

NOTE:

- Take care not to scratch the center console or the related parts.
- Use the appropriate tool from the KTC trim tool set to avoid damage when removing components.

1. Gently pull out the center console rear trim (A) to detach the clips, then remove the trim.

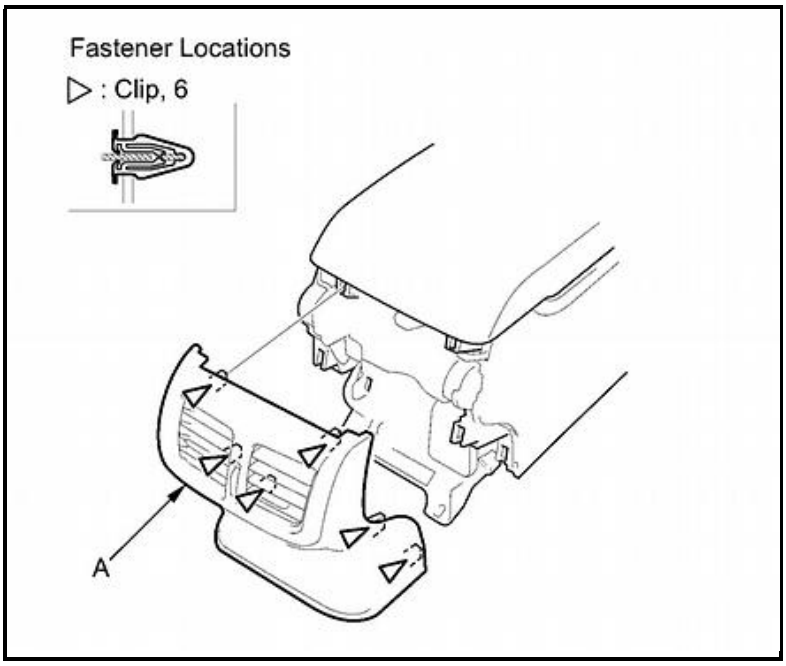

2. Install the trim in the reverse order of removal, and note these items:

   - If the clips are damaged or stress-whitened, replace them with new ones.
   - Push the clips into place securely.

© 2016 ALLDATA, LLC. All Rights Reserved. (Version 2.0.13801)

Center Console Armrest Replacement

Special Tools Required

- KTC Trim Tool Set SOJATP2014
  *Available through the Acura Tool and Equipment Program

NOTE:

- Take care not to scratch the center console or related parts.
- Use the appropriate tool from the KTC trim tool set to avoid damage when removing components.

1. Remove the center console rear trim See: Console > Removal and Replacement > Center Console Rear Trim Removal/Installation.

2. Gently pull out the console upper trims (A) to detach the clips, and remove the trims. Remove the screws securing the center console (B).

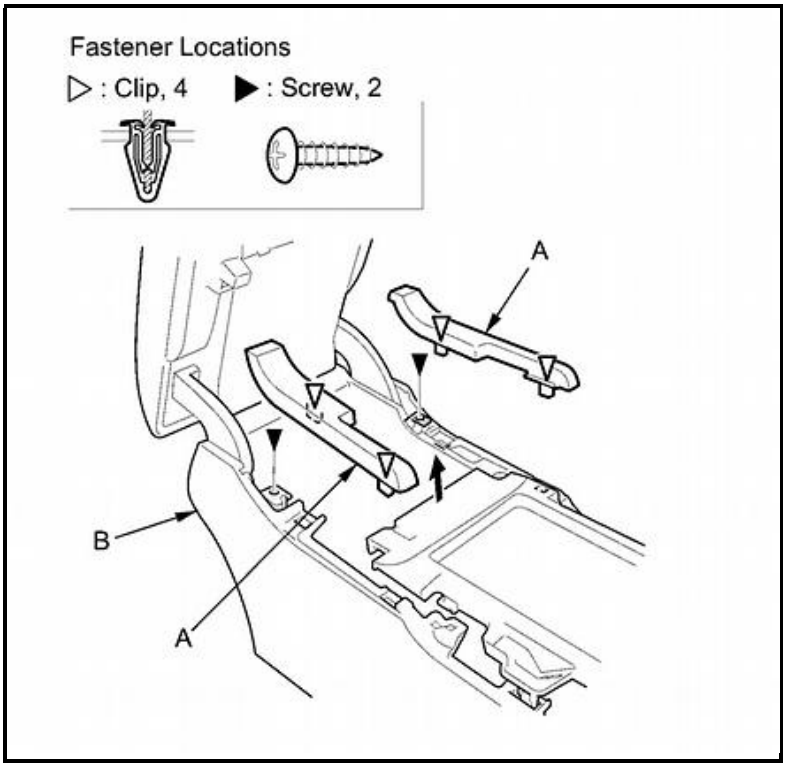

3. Turn the center console light socket (A) 45 ° counterclockwise to remove the socket from housing. Remove the screws securing the center console armrest (B).

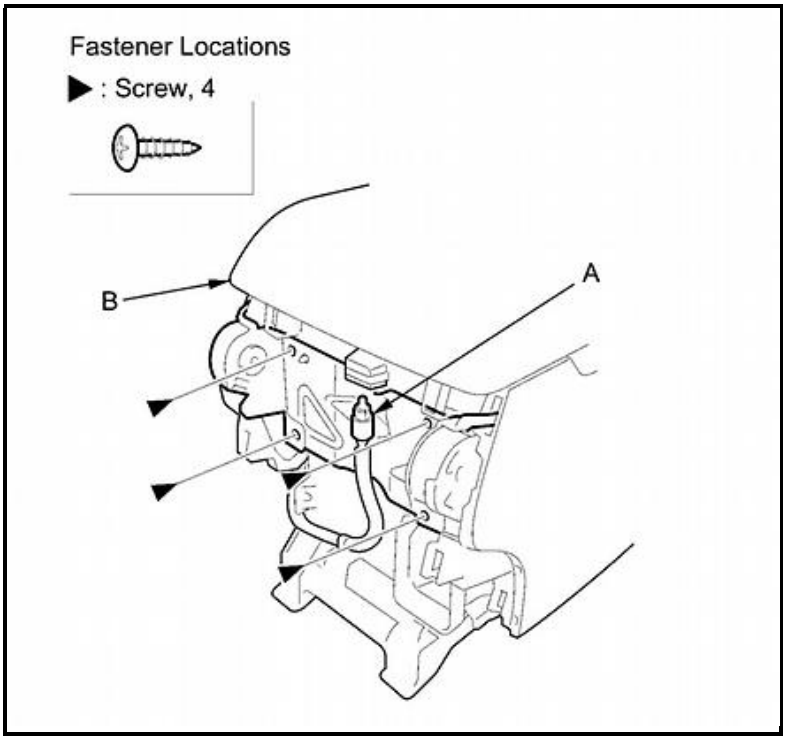

4. Pull up the center console armrest (A) and remove it.

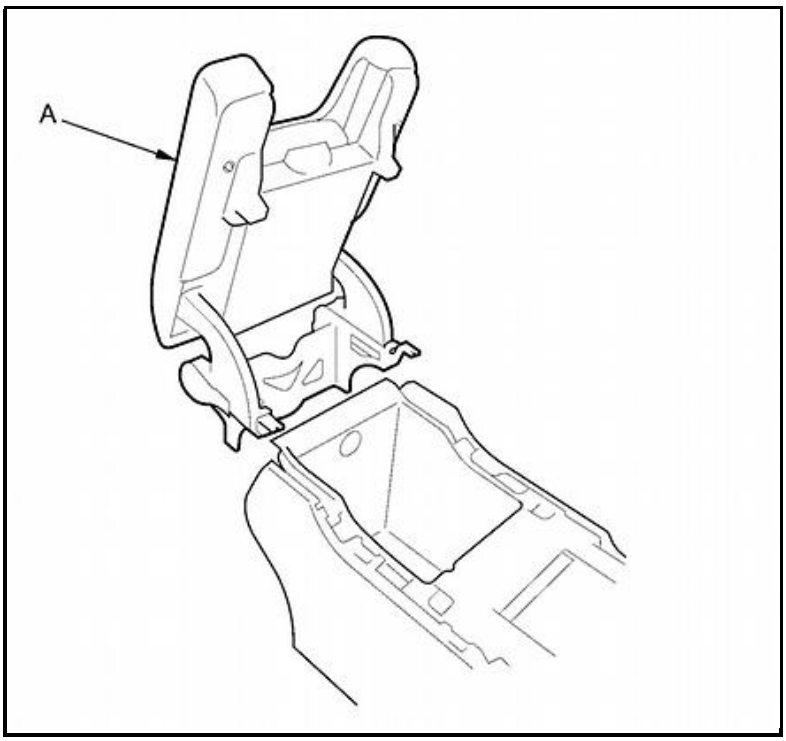

5. Install the armrest in the reverse order of removal, and note these items:

- If the clips are damaged or stress-whitened, replace them with new ones.
- Push the clips into place securely.

© 2016 ALLDATA, LLC. All Rights Reserved. (Version 2.0.13801)