Passenger Seat Components

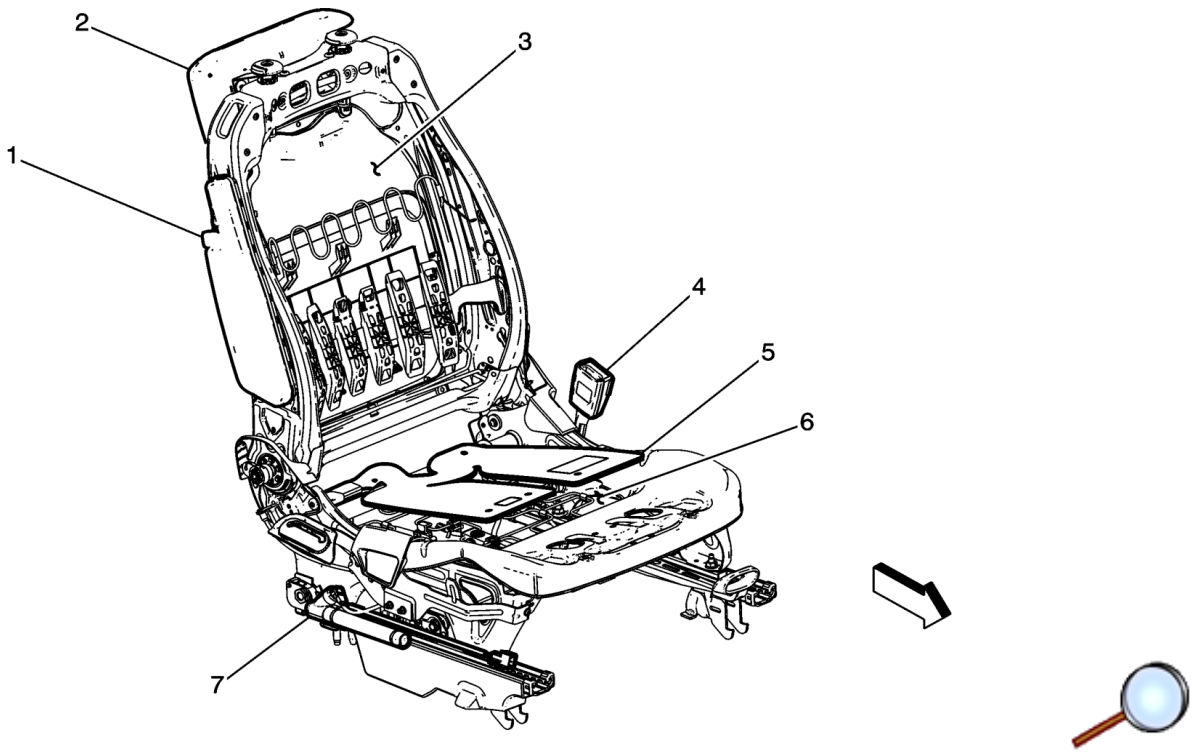

(1) F106R Side Air Bag – Right
(2) P22F Video Display – Passenger Seatback (UWG)
(3) E14C Seat Heating Element – Passenger Back (KA1)
(4) B88P Seat Belt Switch – Passenger
(5) K85 Passenger Presence Detection Module
(6) E14D Seat Heating Element – Passenger Cushion (KA1)
(7) F113P Seat Belt Anchor Pretensioner – Passenger

© 2016 General Motors. All rights reserved.