Auxiliary Air Compressor Schematics

© 2016 General Motors. All rights reserved.

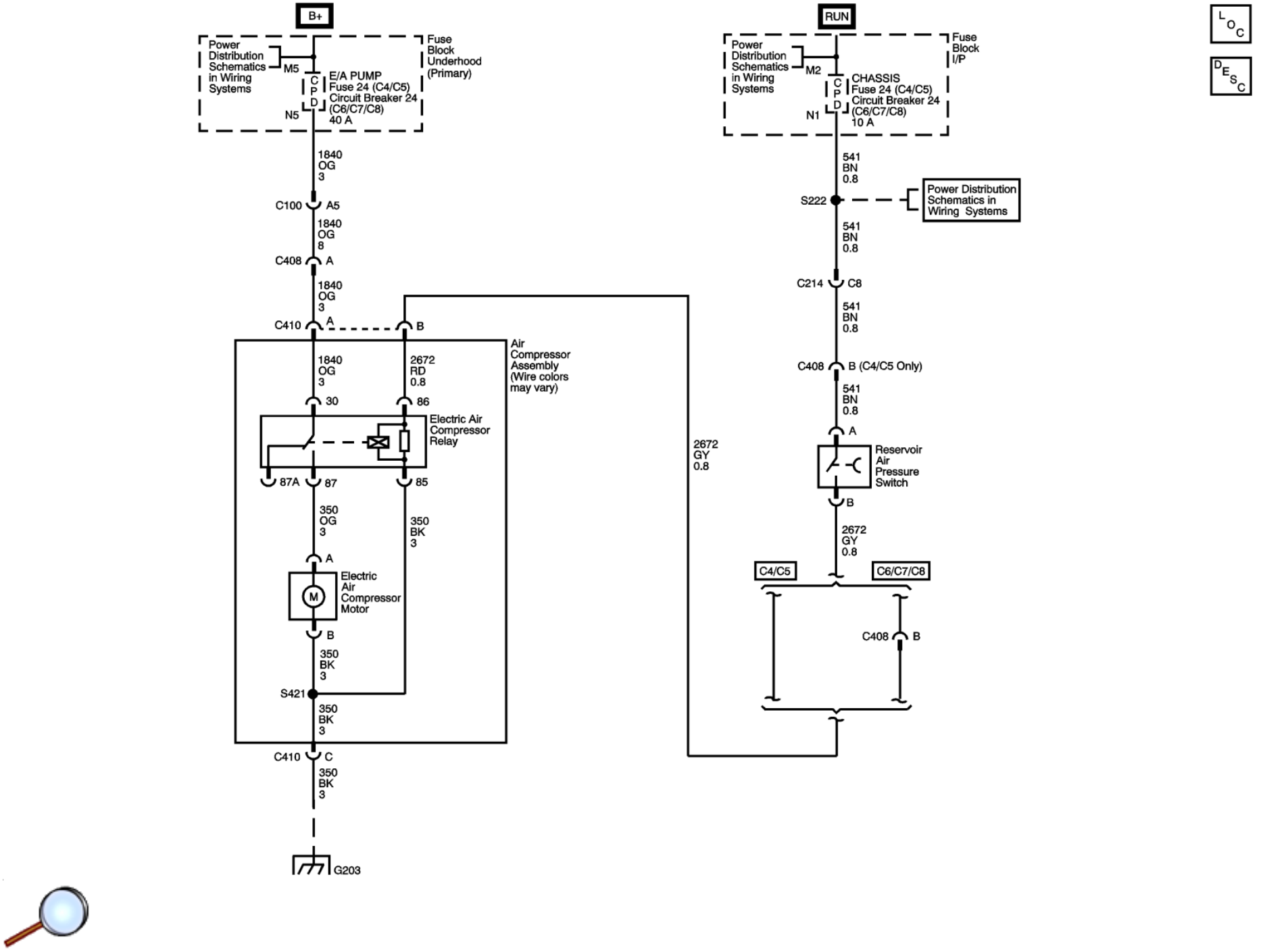
B+
Power Distribution Schematics in Wiring Systems
M5
C P D
E/A PUMP Fuse 24 (C4/C5) Circuit Breaker 24 (C6/C7/C8) 40 A
N5
Fuse Block Underhood (Primary)
1840 OG 3
C100 A5
1840 OG 8
C408 A
1840 OG 3
C410 A
B
Air Compressor Assembly (Wire colors may vary)
1840 OG 3
2672 RD 0.8
30
86
Electric Air Compressor Relay
87A
87
85
350 OG 3
350 BK 3
A
Electric Air Compressor Motor
M
B
350 BK 3
S421
350 BK 3
C410 C
350 BK 3
G203
2672 GY 0.8
RUN
Power Distribution Schematics in Wiring Systems
M2
C P D
CHASSIS Fuse 24 (C4/C5) Circuit Breaker 24 (C6/C7/C8) 10 A
N1
Fuse Block I/P
541 BN 0.8
S222
Power Distribution Schematics in Wiring Systems
541 BN 0.8
C214 C8
541 BN 0.8
C408 B (C4/C5 Only)
541 BN 0.8
A
Reservoir Air Pressure Switch
B
2672 GY 0.8
C4/C5
C6/C7/C8
C408 B
LOC
DESC