REMOVAL AND INSTALLATION

Starter Motor — 6.0L Diesel

Removal and Installation

⚠ WARNING: When performing maintenance on the starting system, be aware heavy gauge leads are connected to the battery. Make sure protective caps are in place when maintenance is complete.

1. Disconnect the battery ground cable (14301). For additional information, refer to Section 414-01.

2. With the vehicle in NEUTRAL, position it on a hoist. For additional information, refer to Section 100-02

3. Remove starter solenoid protective cap.

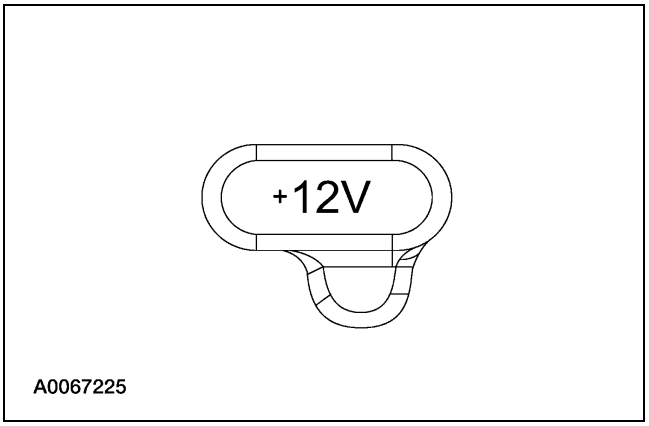

4. Disconnect the starter motor electrical connections.

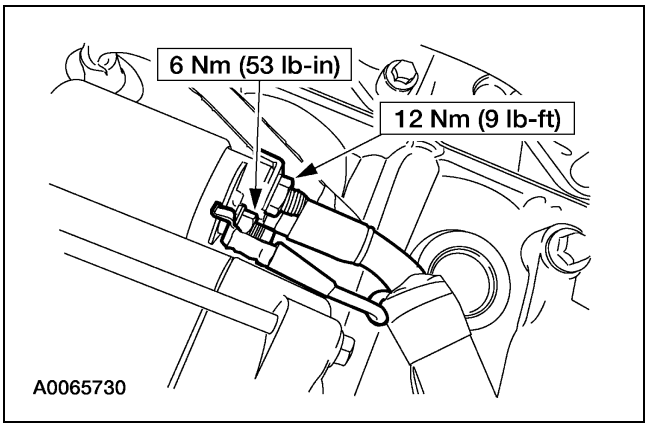

5. Remove the bolts and the starter.

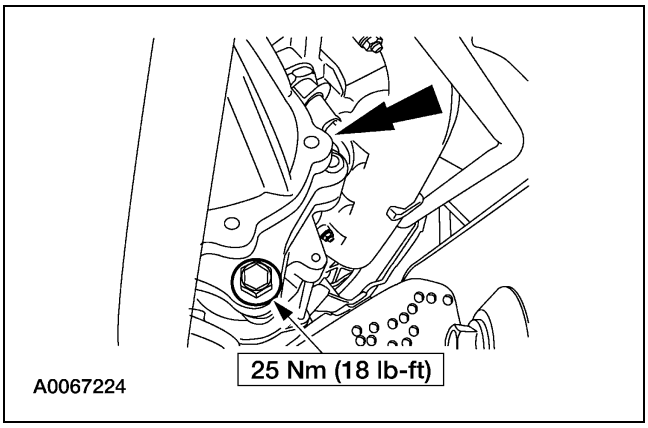

6. To install, reverse the removal procedure.

Copyright © 2002, Ford Motor Company