PRODEMAND

1989 Chevrolet S10 Blazer 4.3L Eng

Vehicle Reference: VACUUM DIAGRAMS

VACUUM HOSE DIAGRAM(S)

NOTE: Letters in parenthesis indicate emission calibration code.

Fig 1: Vacuum Diagram (2.5L 4-Cyl., "M" Series Federal/High Altitude All Trans. (DDH) California All Trans. (DDJ))

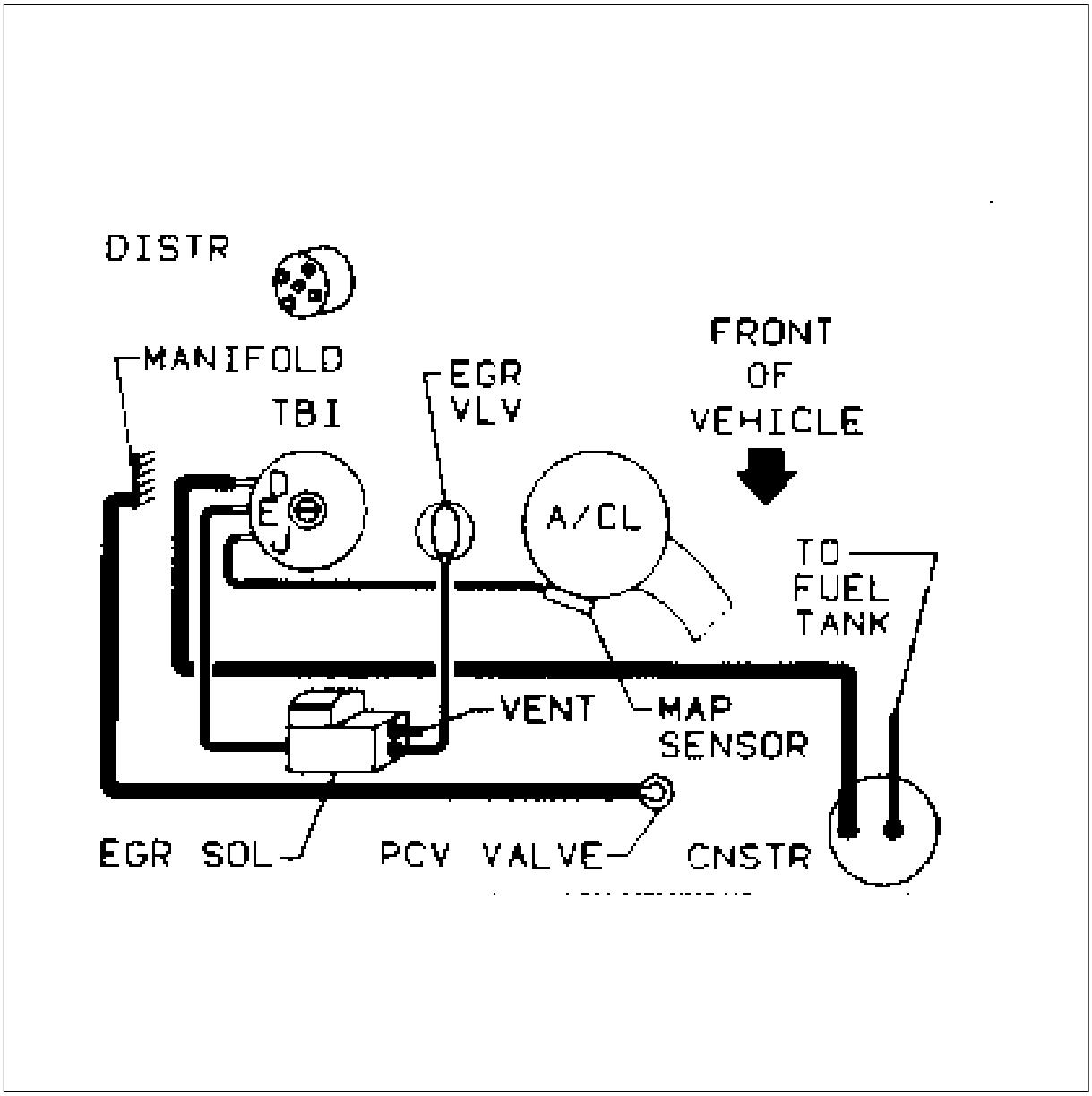

Courtesy of GENERAL MOTORS CORP.

Fig 2: Vacuum Diagram (4.3L V6, "G" Series Light Duty Federal All Trans. (DFL) Light Duty California All Trans. (DFN))

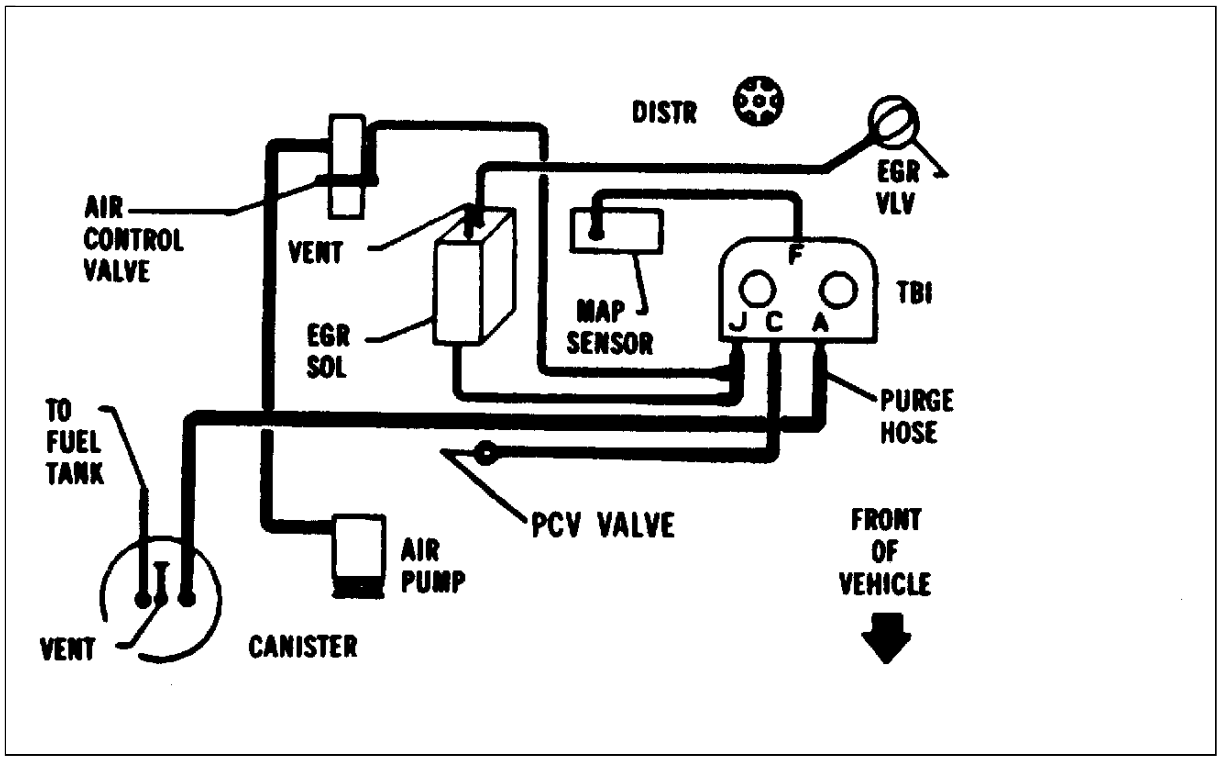

Courtesy of GENERAL MOTORS CORP.

Fig 3: Vacuum Diagram (4.3L V6, "C" & "K" Series Light Duty California All Trans. (DDZ))

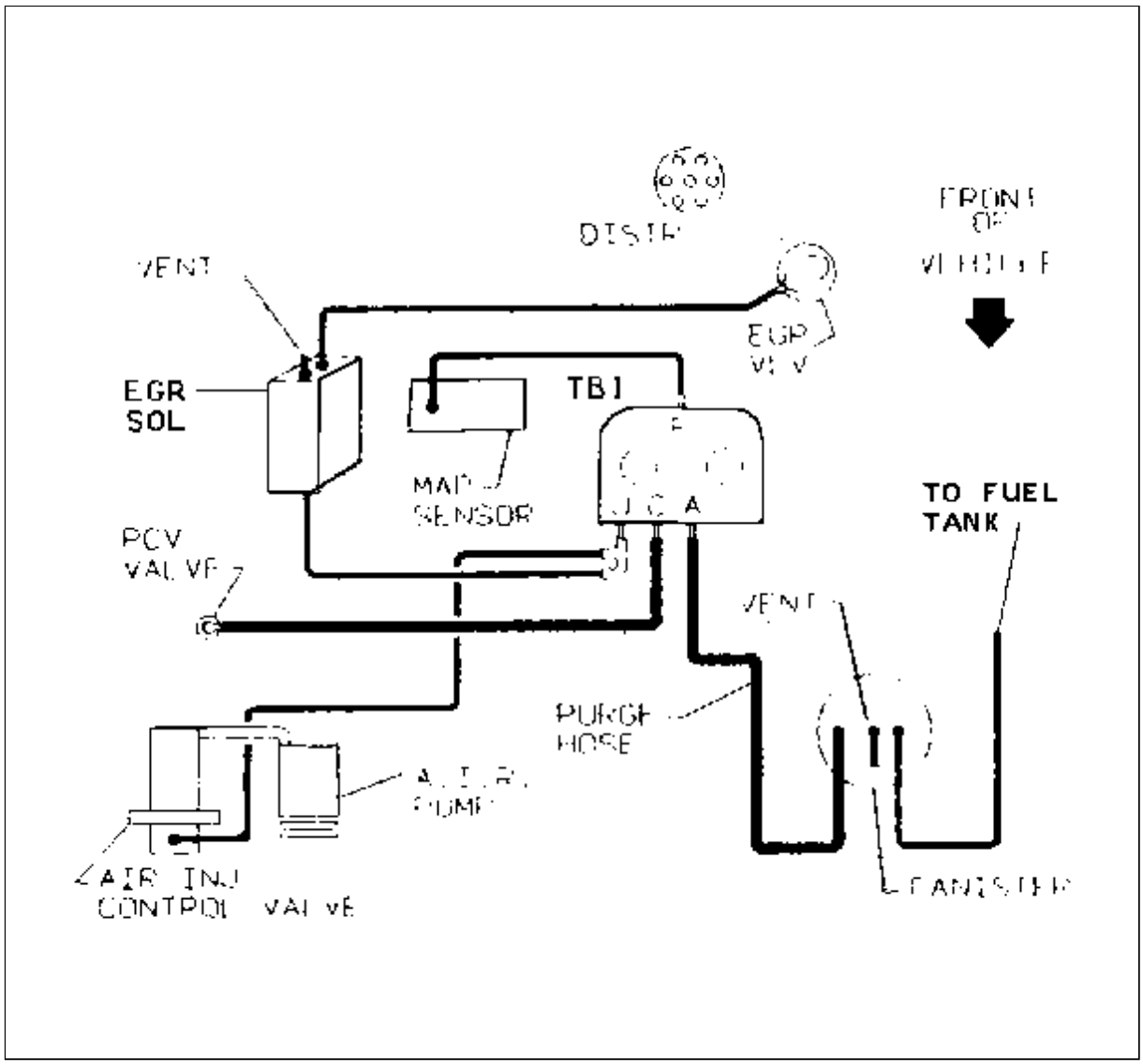

Courtesy of GENERAL MOTORS CORP.

Fig 4: Vacuum Diagram (4.3L V6, "M" Series Light Duty Federal A/T (DFB) Light Duty California A/T (DFD))

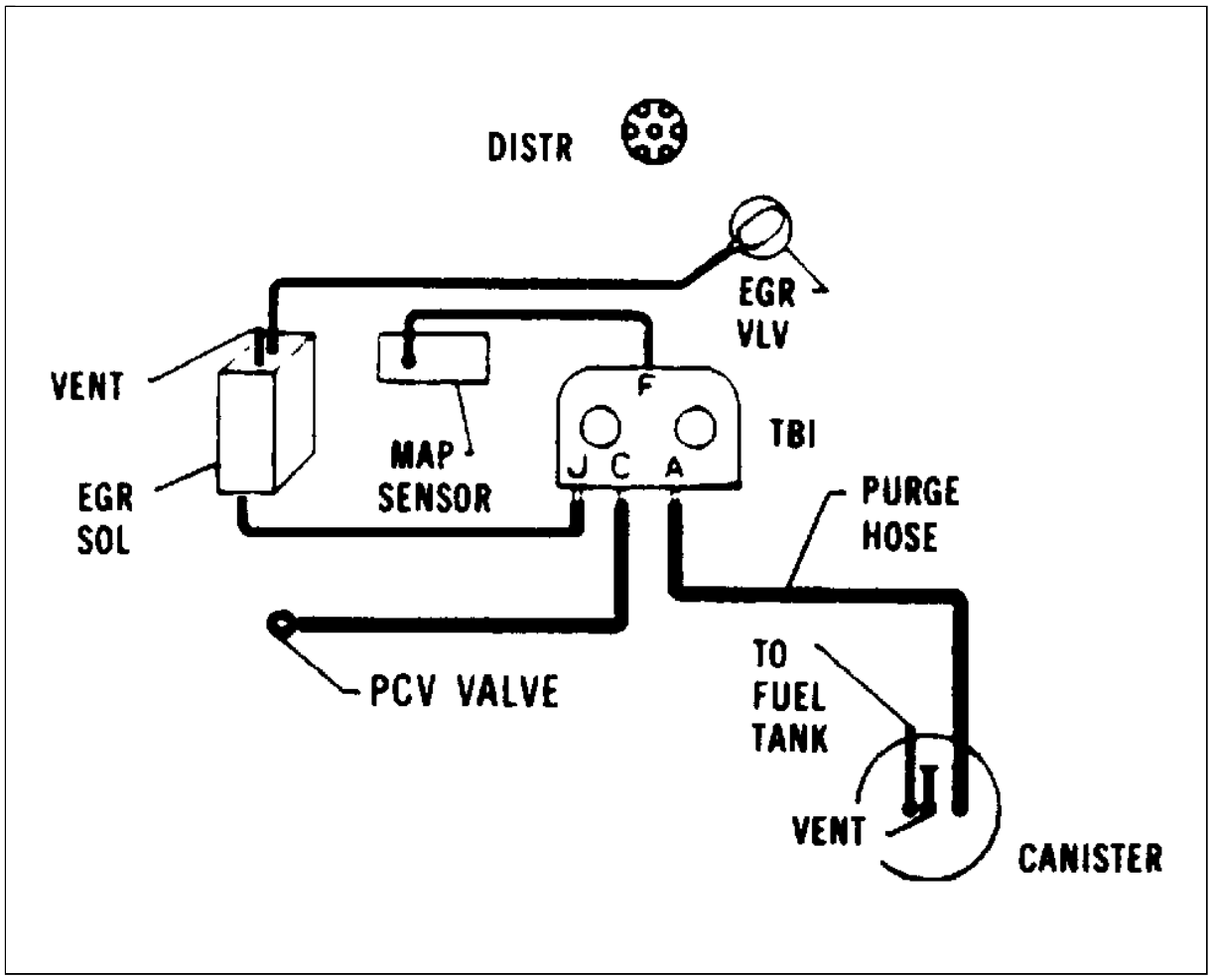

Courtesy of GENERAL MOTORS CORP.

Fig 5: Vacuum Diagram (4.3L V6, "G" Series Light Duty High Altitude M/T (DFM))

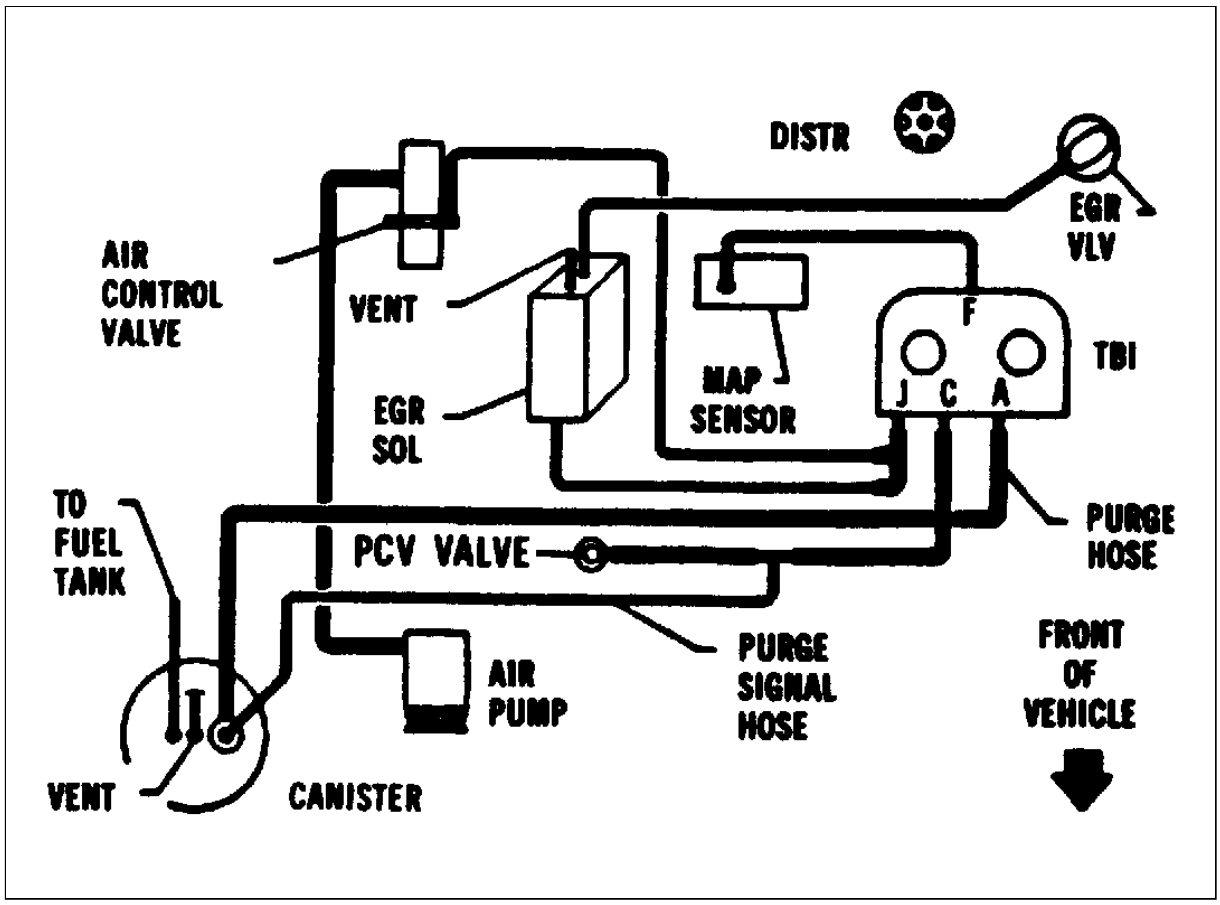

Courtesy of GENERAL MOTORS CORP.

Fig 6: Vacuum Diagram (4.3L V6, "G" Series Light Duty Federal A/T (DFJ))

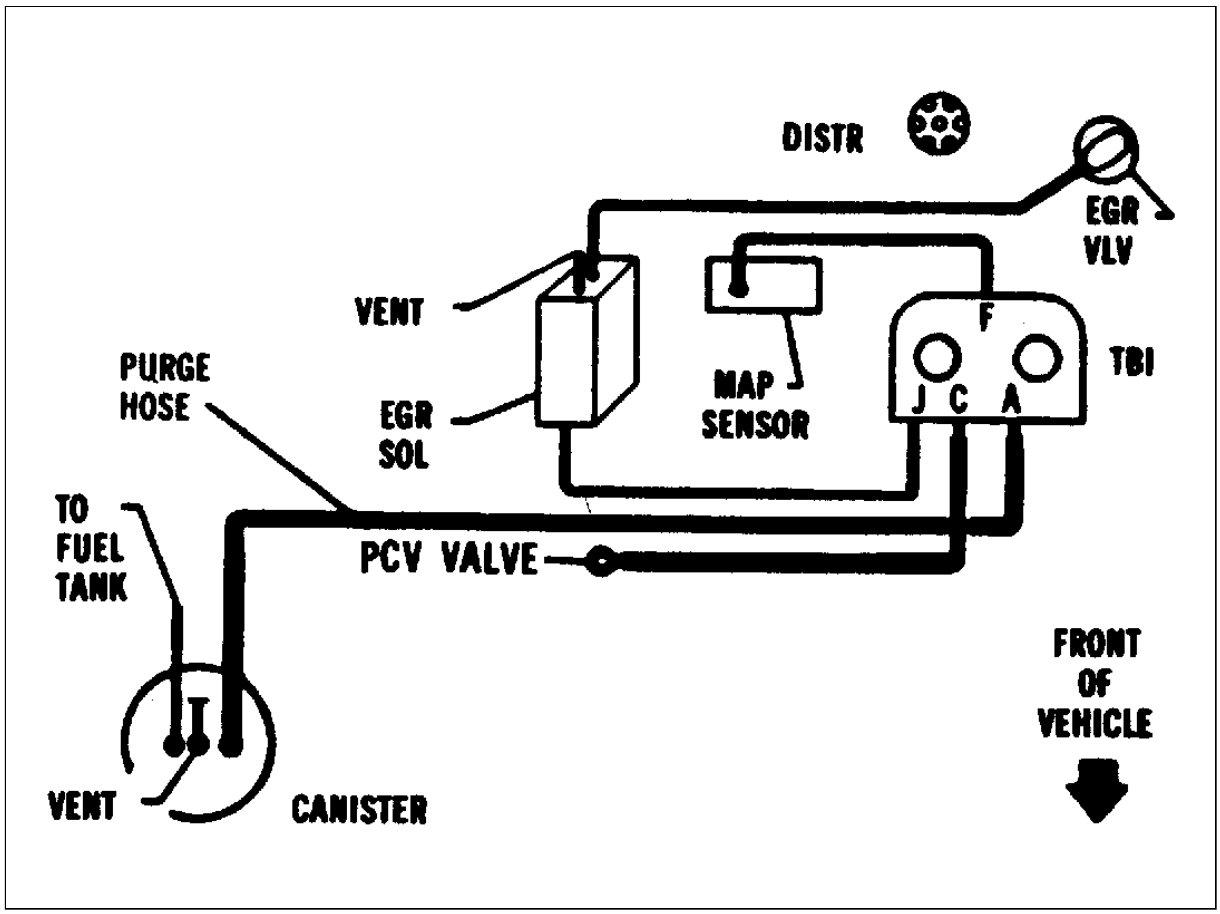

Courtesy of GENERAL MOTORS CORP.

Fig 7: Vacuum Diagram (4.3L V6, "G" Series Light Duty High Altitude A/T (DFK))

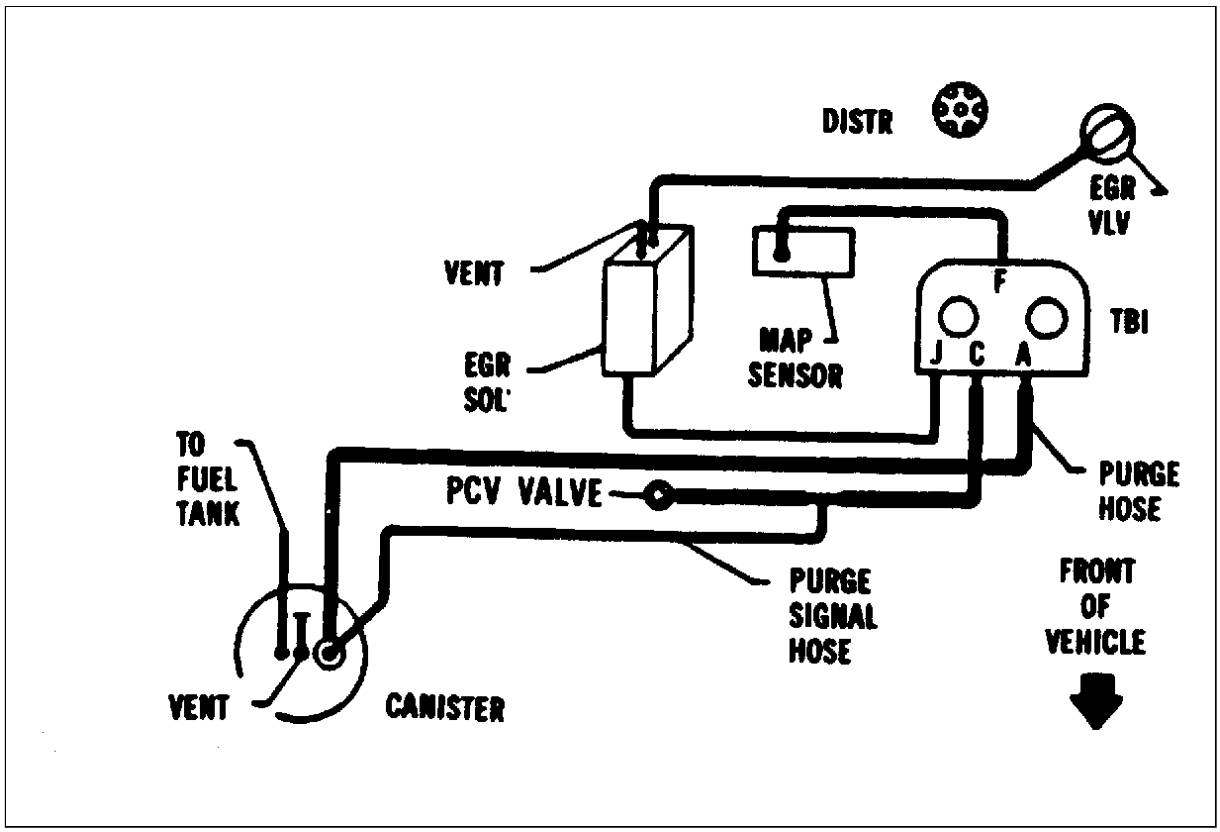

Courtesy of GENERAL MOTORS CORP.

Fig 8: Vacuum Diagram (4.3L V6, "C" & "K" Series Light Duty Federal/High Altitude M/T (DDY))

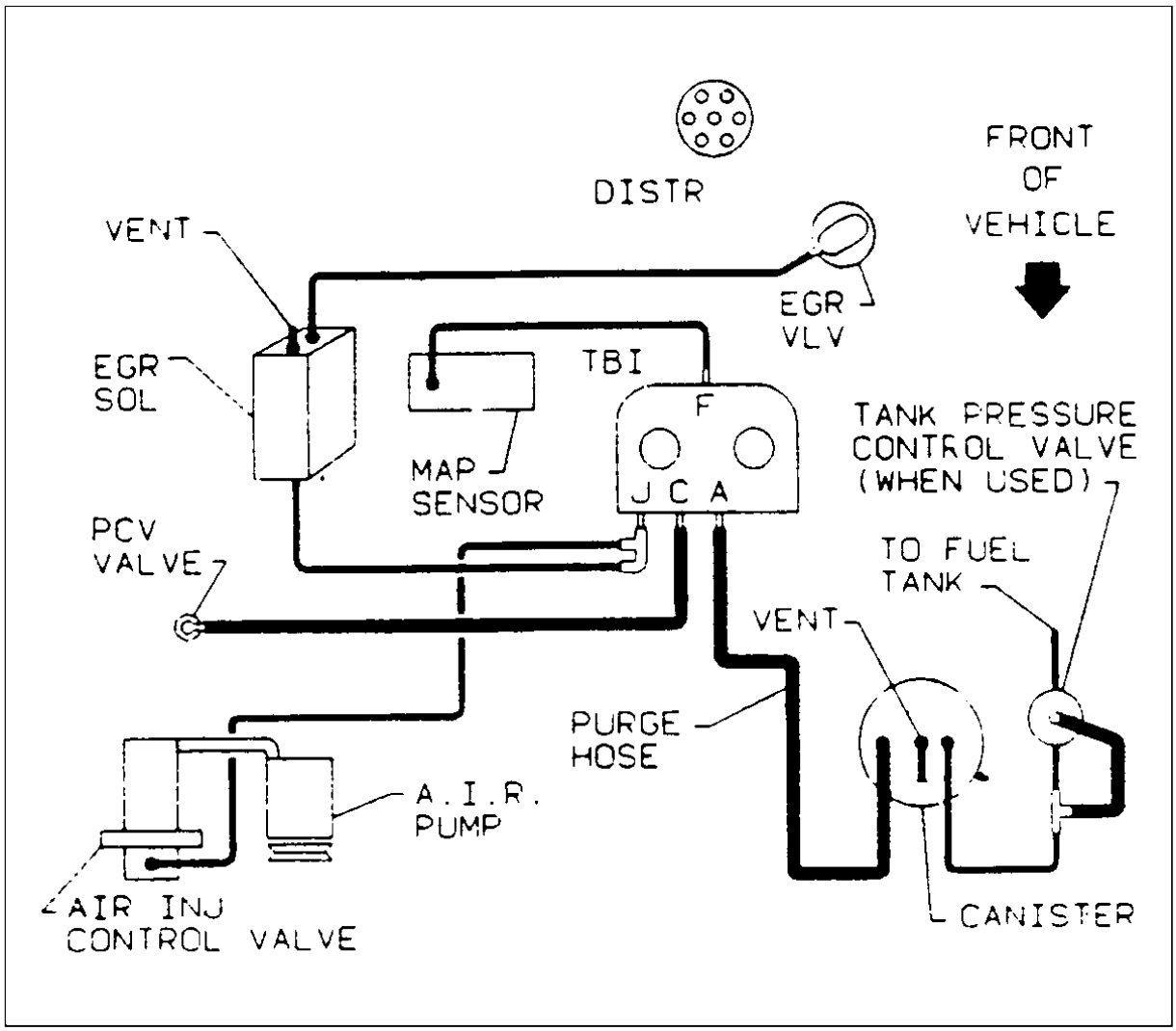

Courtesy of GENERAL MOTORS CORP.

Fig 9: Vacuum Diagram (4.3L V6, "C" & "K" Series Light Duty Federal/High Altitude A/T (DDX))

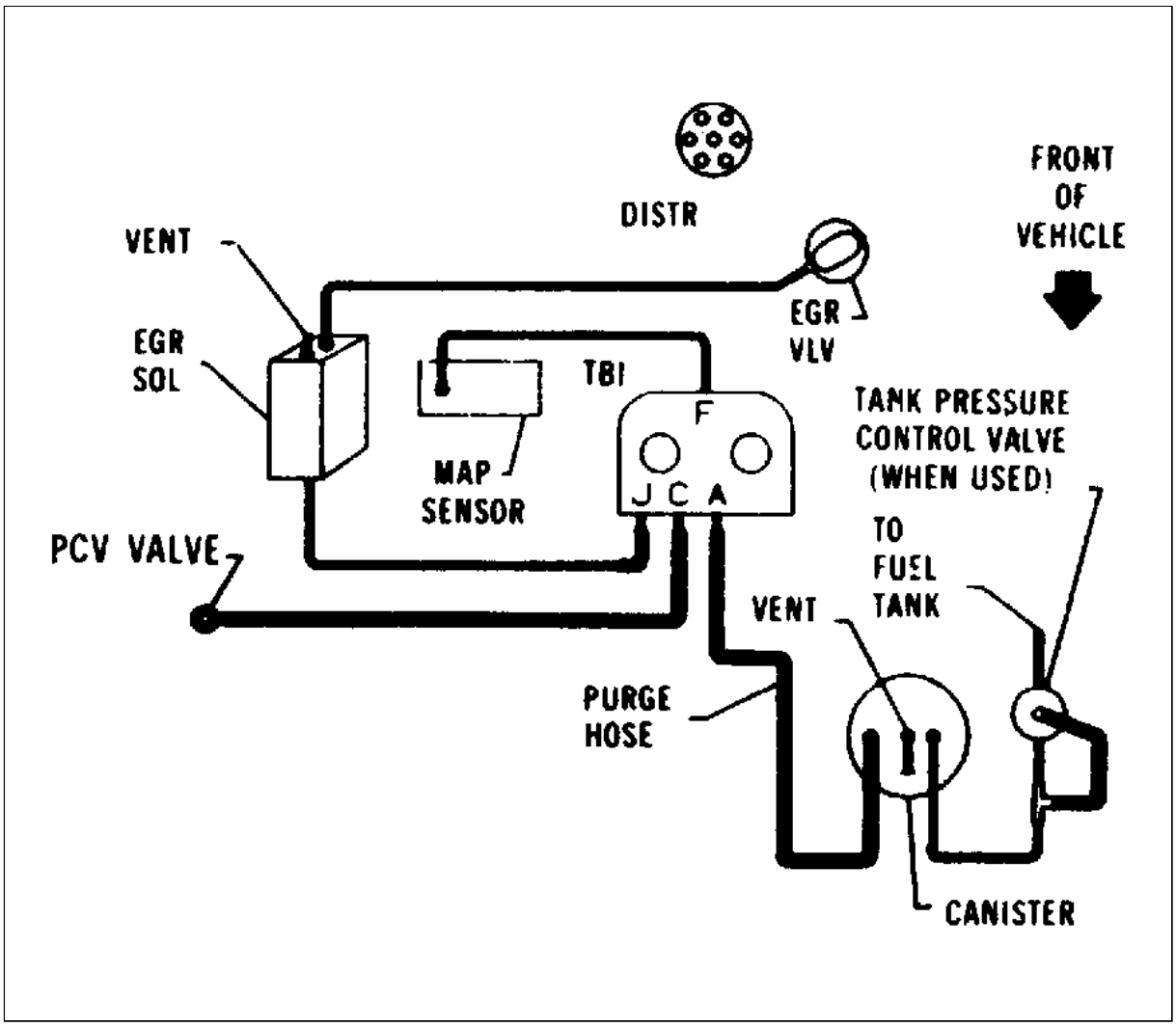

Courtesy of GENERAL MOTORS CORP.

Fig 10: Vacuum Diagram (4.3L V6, "M" Series Light Duty California M/T (DFF))

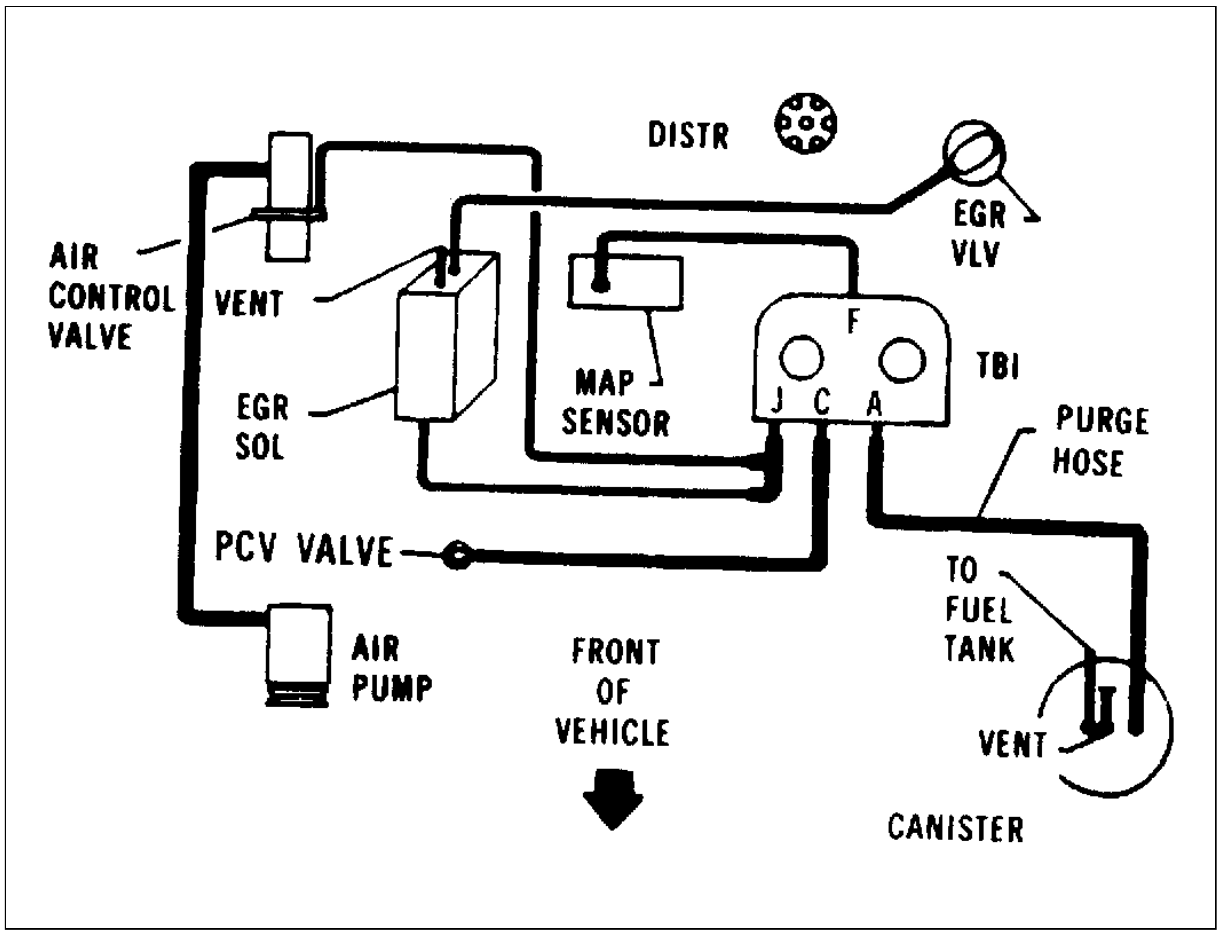

Courtesy of GENERAL MOTORS CORP.

Fig 11: Vacuum Diagram (4.8L 6-Cyl., "P" Series Federal All Trans. (DKD, DKC))

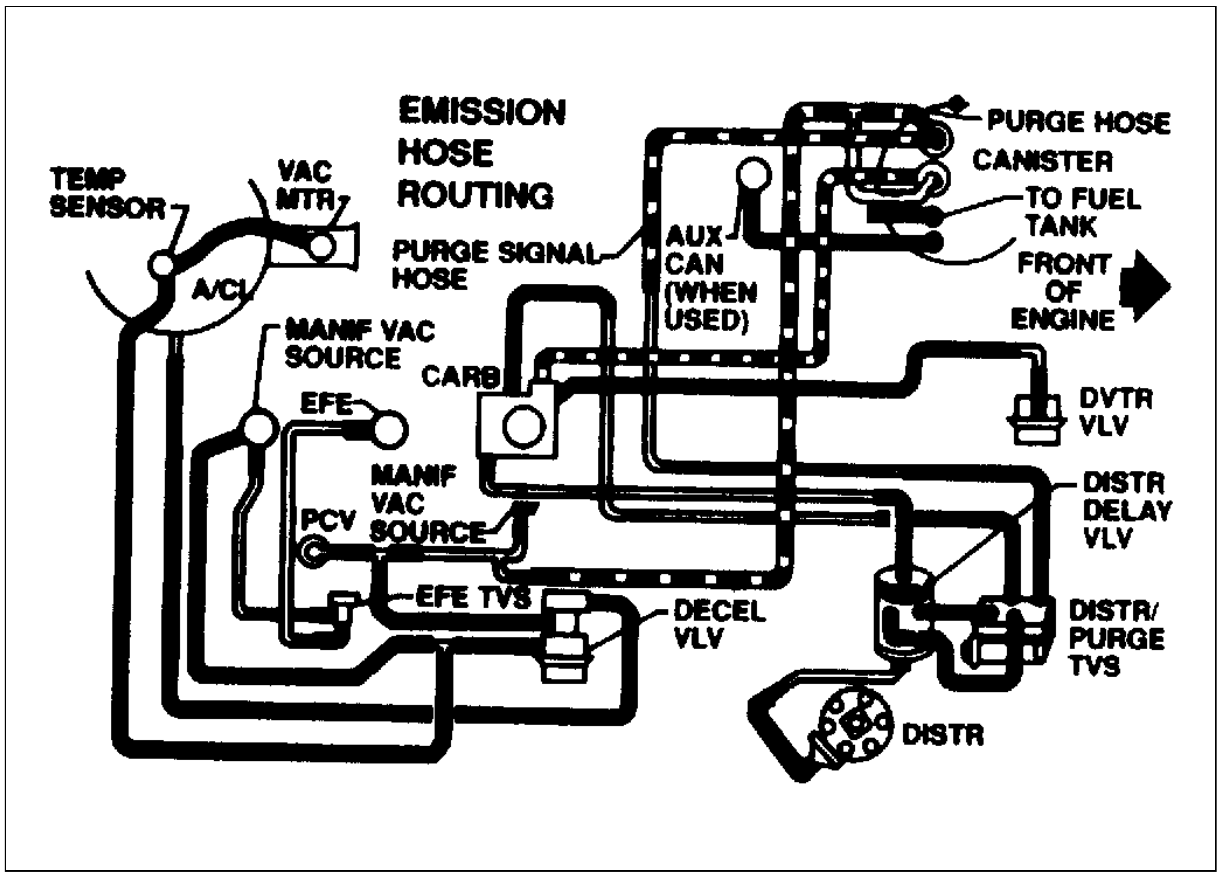

Courtesy of GENERAL MOTORS CORP.

Fig 12: Vacuum Diagram (5.0L V8, "C" & "K" Series Light Duty California A/T (DFU))

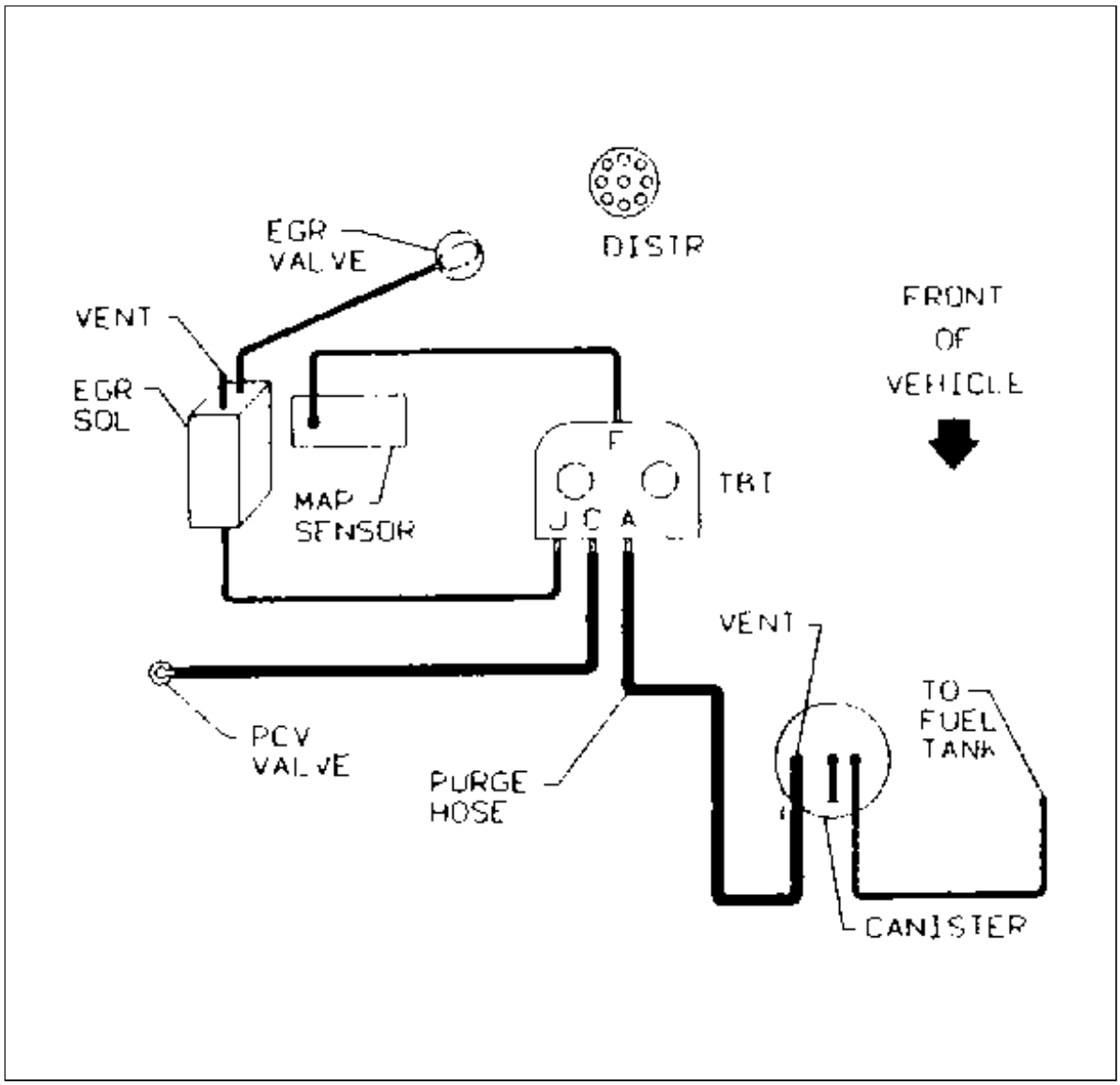

Courtesy of GENERAL MOTORS CORP.

Fig 13: Vacuum Diagram (5.0L V8, "G" Series Light Duty Federal M/T (DLS))

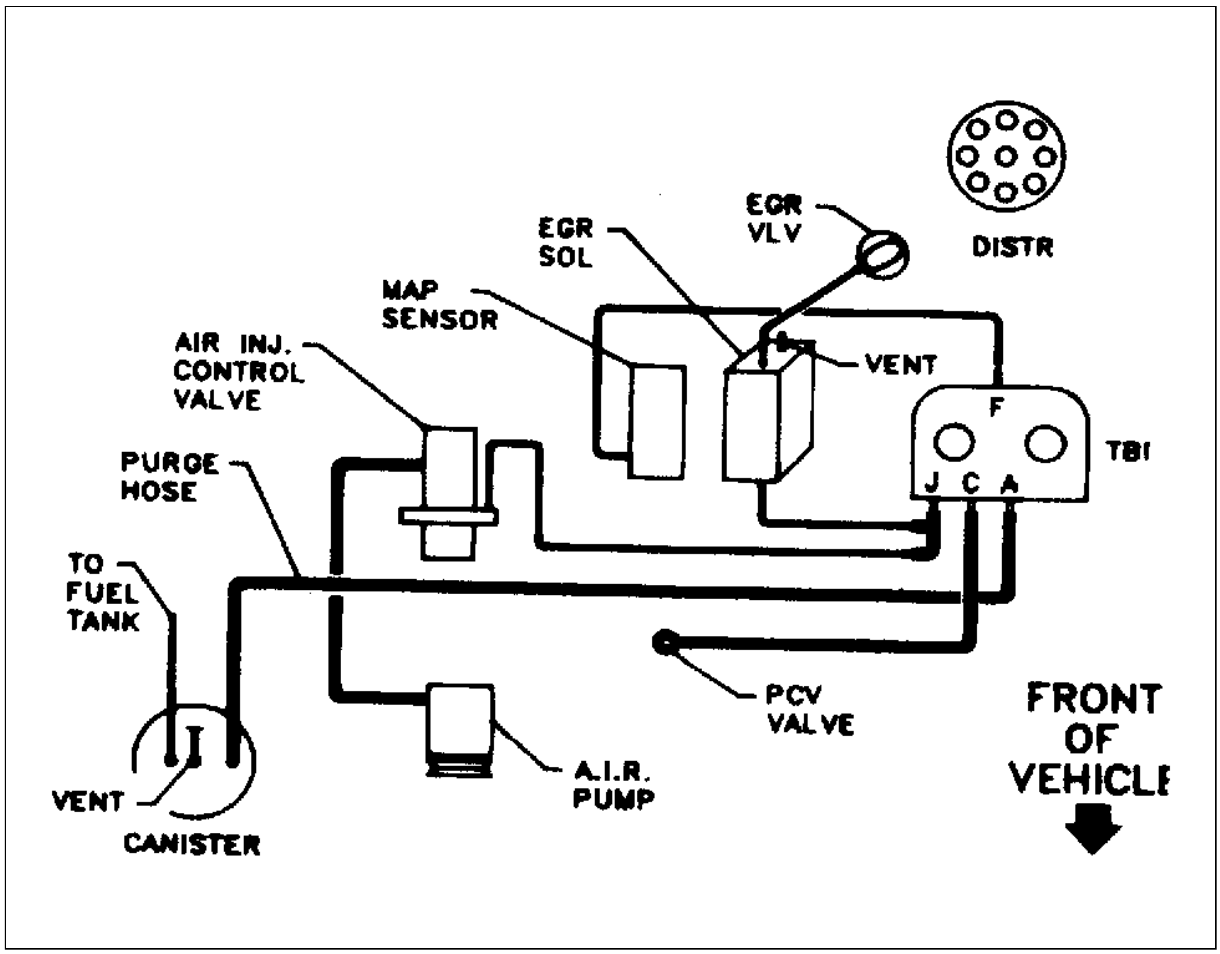

Courtesy of GENERAL MOTORS CORP.

Fig 14: Vacuum Diagram (5.0L V8, "G" Series Light Duty High Altitude A/T (DFX))

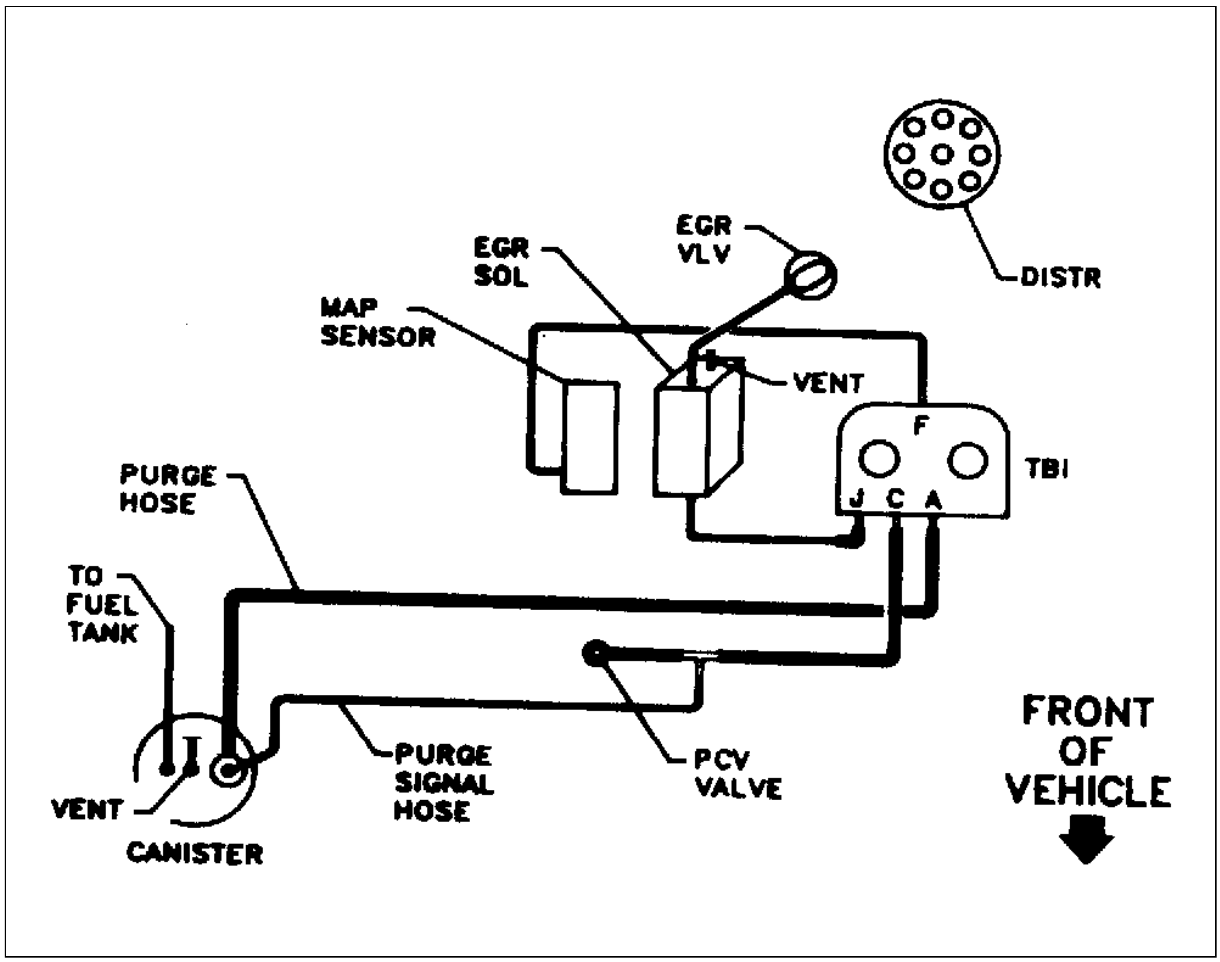

Courtesy of GENERAL MOTORS CORP.

Fig 15: Vacuum Diagram (5.0L V8, "C" & "K" Series Light Duty Federal/High Altitude M/T (DFT))

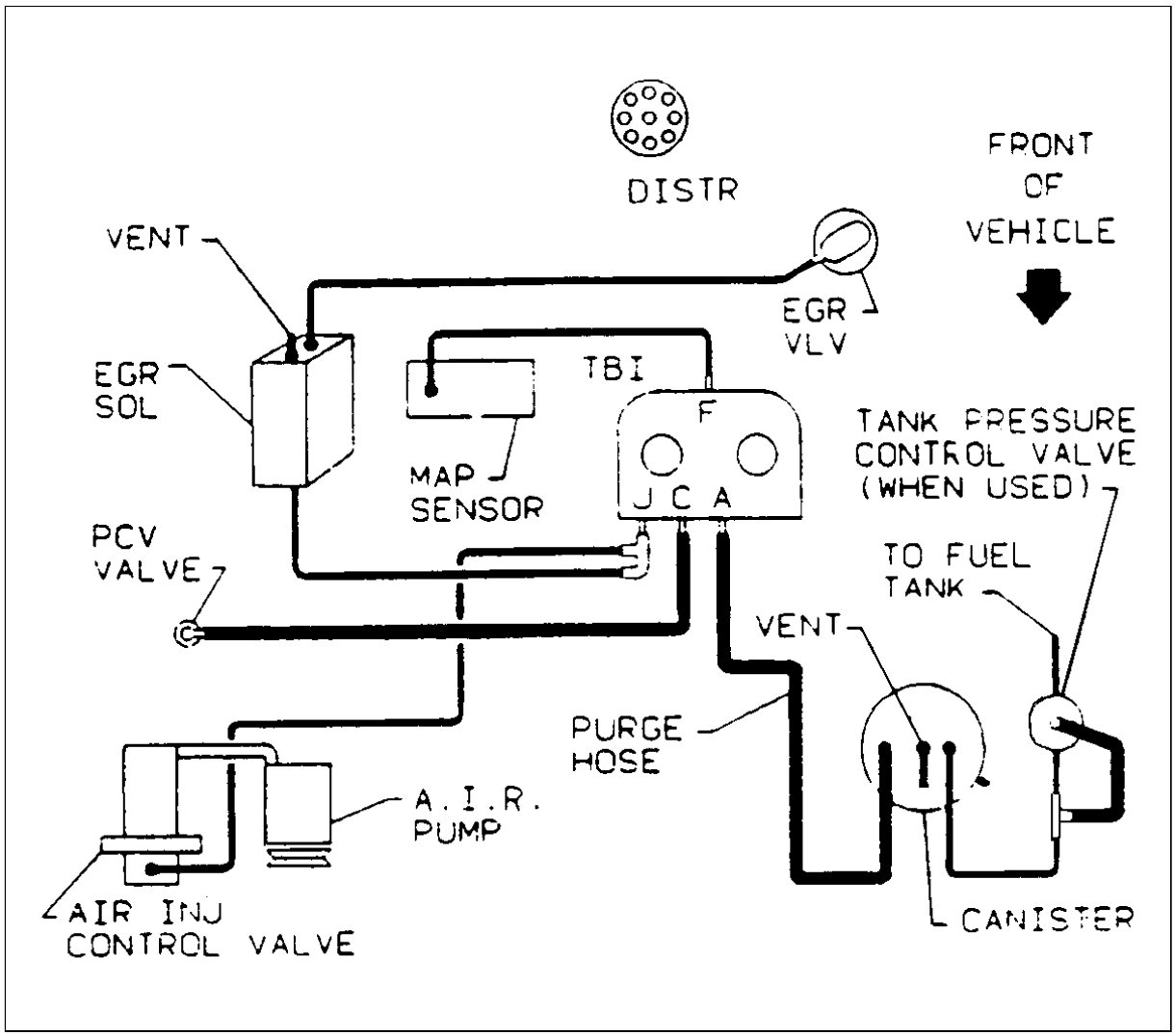

Courtesy of GENERAL MOTORS CORP.

Fig 16: Vacuum Diagram (5.0L V8, "G" Series Light Duty Federal M/T (DLT))

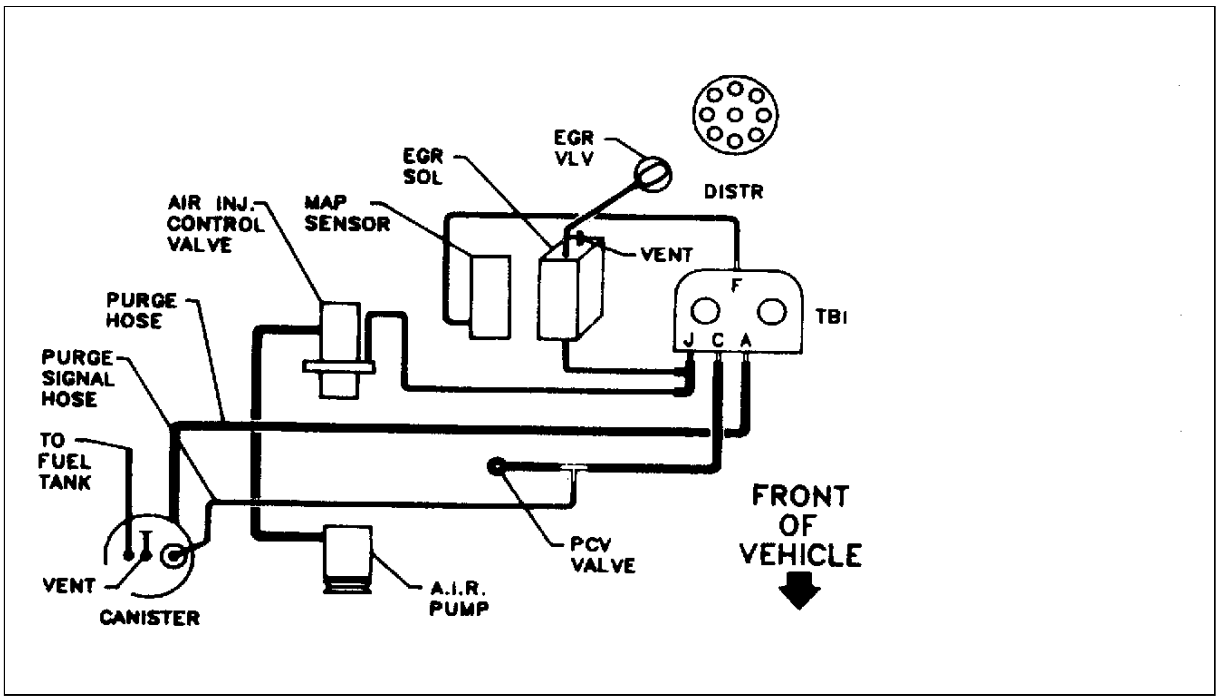

Courtesy of GENERAL MOTORS CORP.

Fig 17: Vacuum Diagram (5.0L V8, "C" & "K" Series Light Duty Federal/High A/T (DFR))

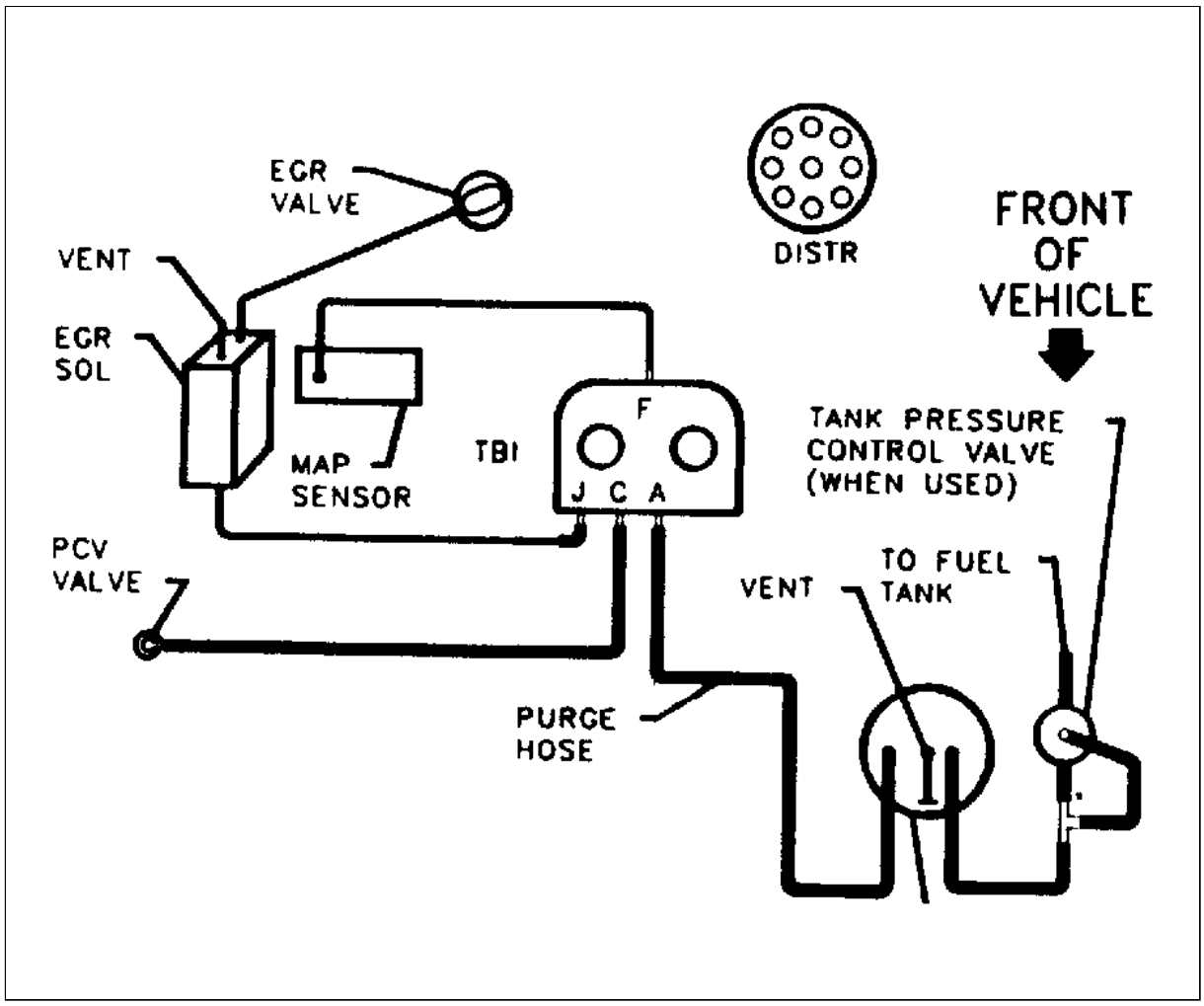

Courtesy of GENERAL MOTORS CORP.

Fig 18: Vacuum Diagram (5.0L V8, "G" Series Light Duty California A/T Trans (DFY))

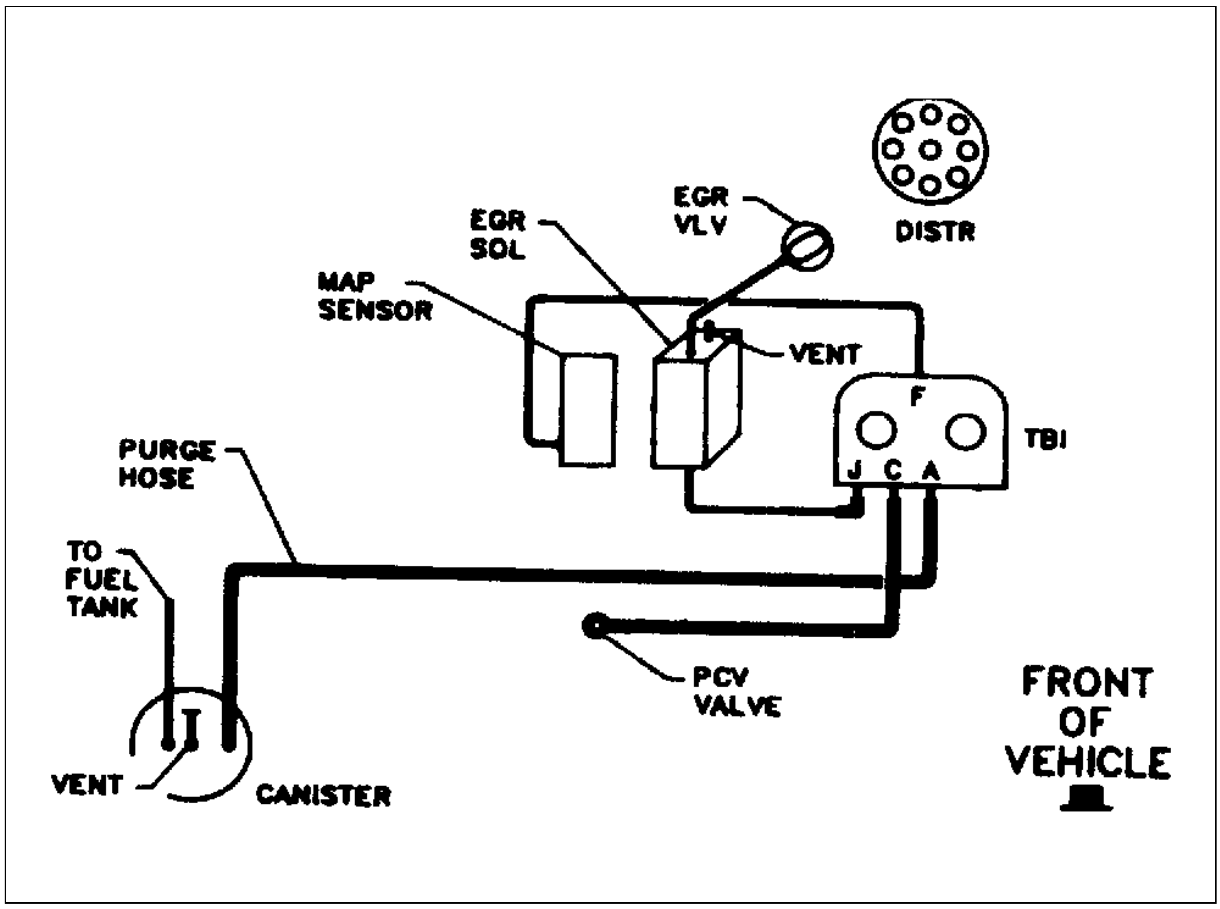

Courtesy of GENERAL MOTORS CORP.

Fig 19: Vacuum Diagram (5.7L V8, "G" Series Heavy Duty High Altitude A/T (DHL, DHN, DHR) Heavy Duty Federal A/T (DHM))

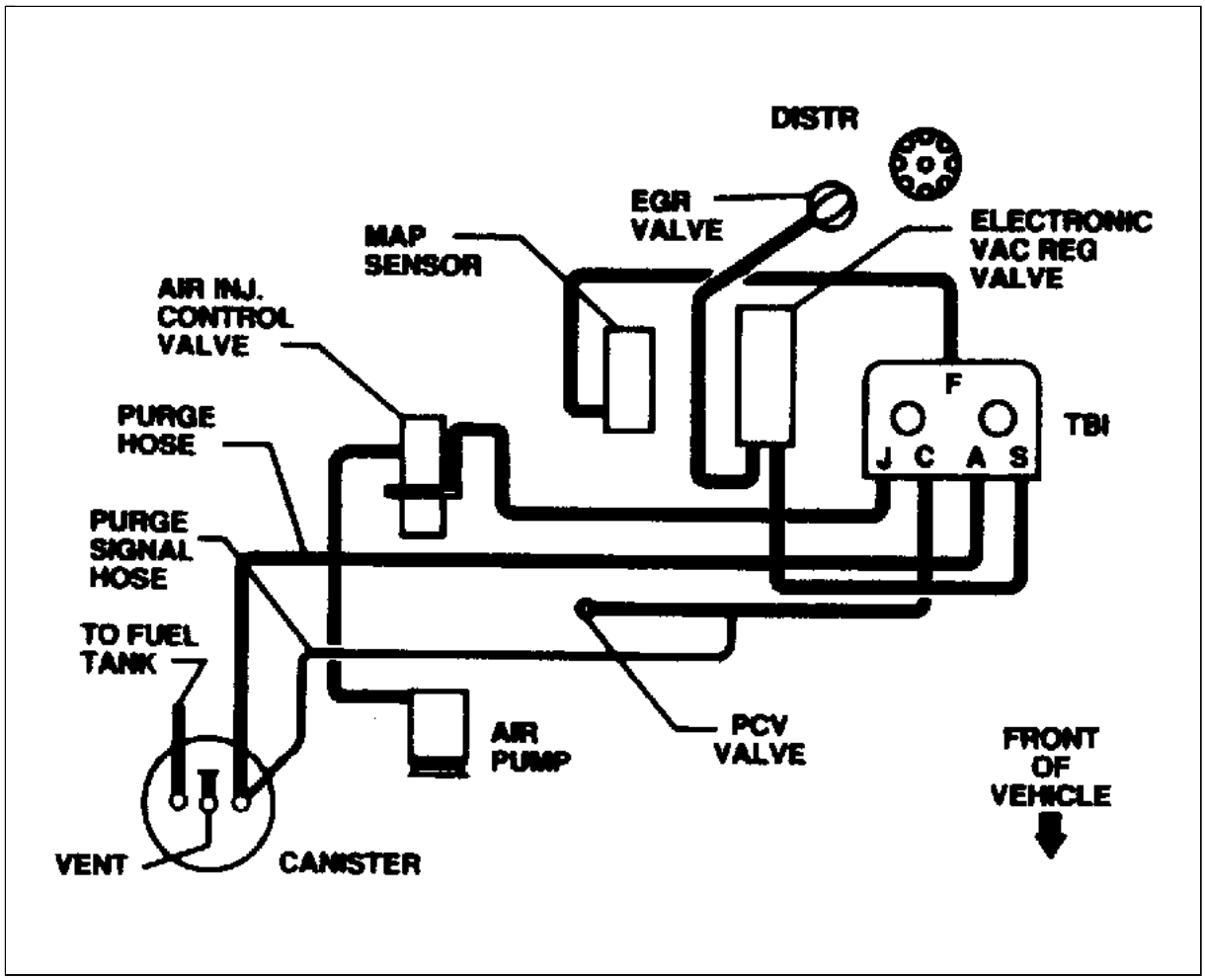

Courtesy of GENERAL MOTORS CORP.

Fig 20: Vacuum Diagram (5.7L V8, "R" & "V" Series Light Duty California A/T (DHB, DHD), Light Duty High Altitude A/T (DHC))

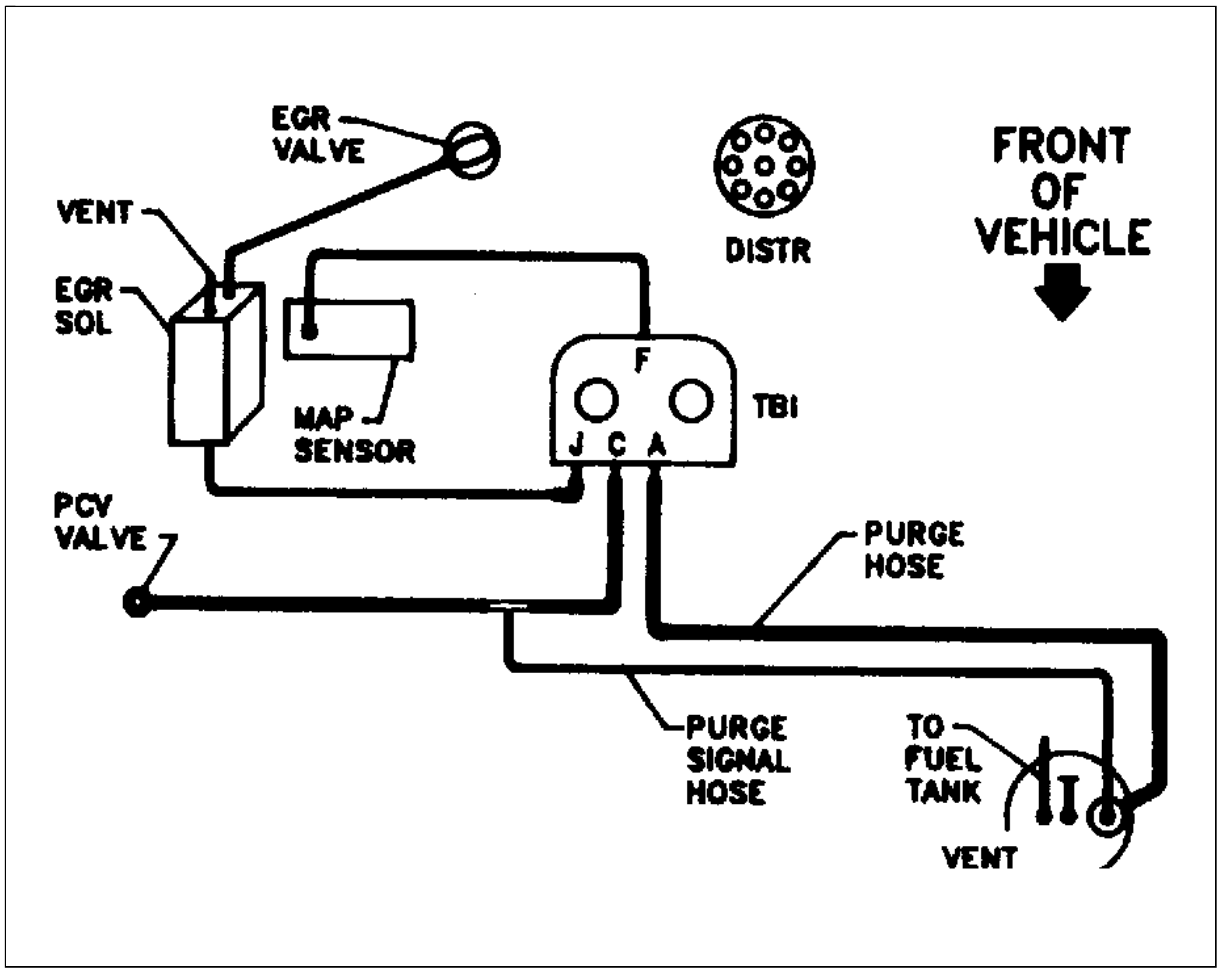

Courtesy of GENERAL MOTORS CORP.

Fig 21: Vacuum Diagram (5.7L V8, "G" Series Heavy Duty California A/T (DHT, DHS), Heavy Duty Federal A/T (DHP, DHK))

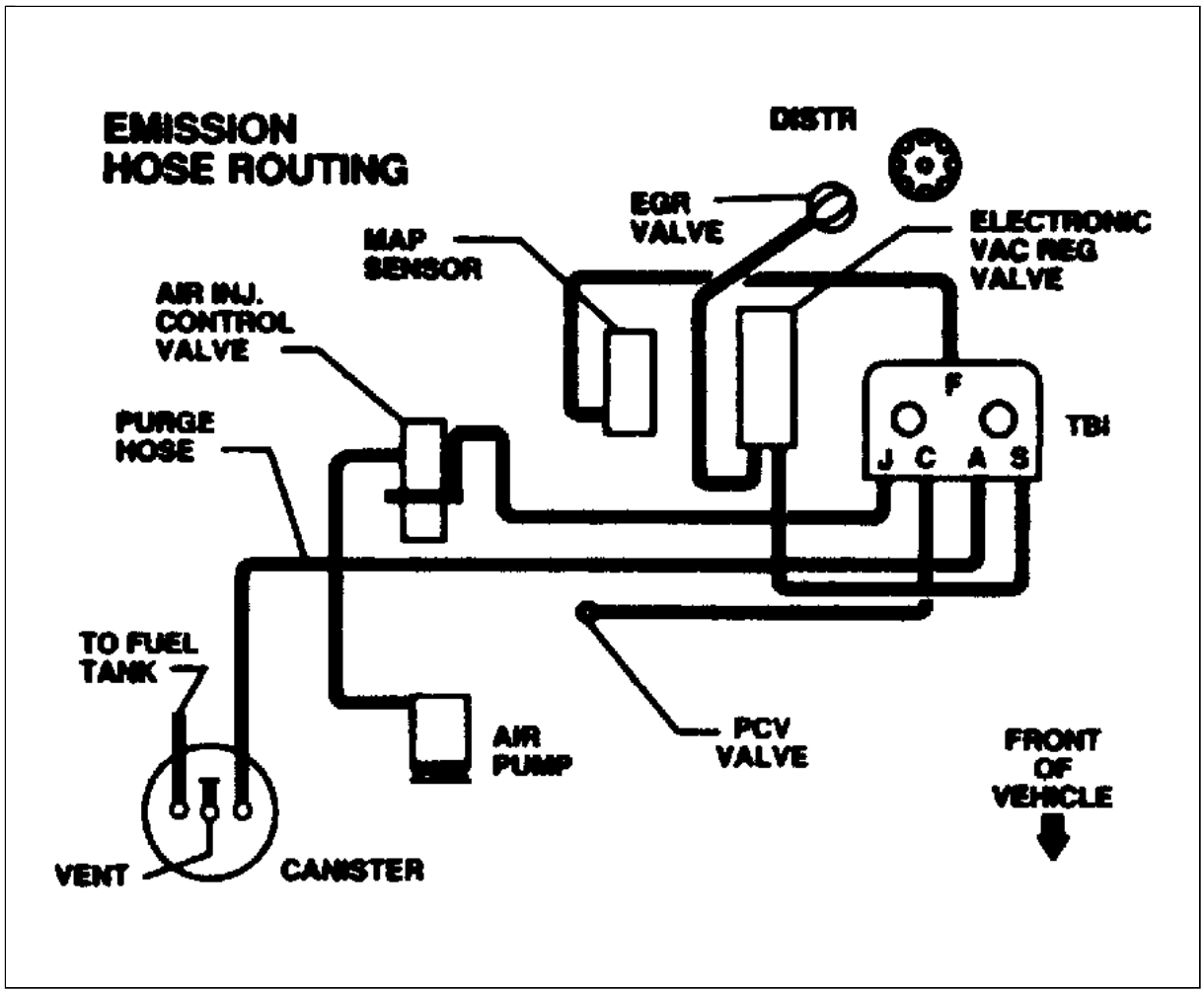

Courtesy of GENERAL MOTORS CORP.

Fig 22: Vacuum Diagram (5.7L V8, "G" Series Light Duty Federal A/T (DHF) Light Duty California A/T (DHJ))

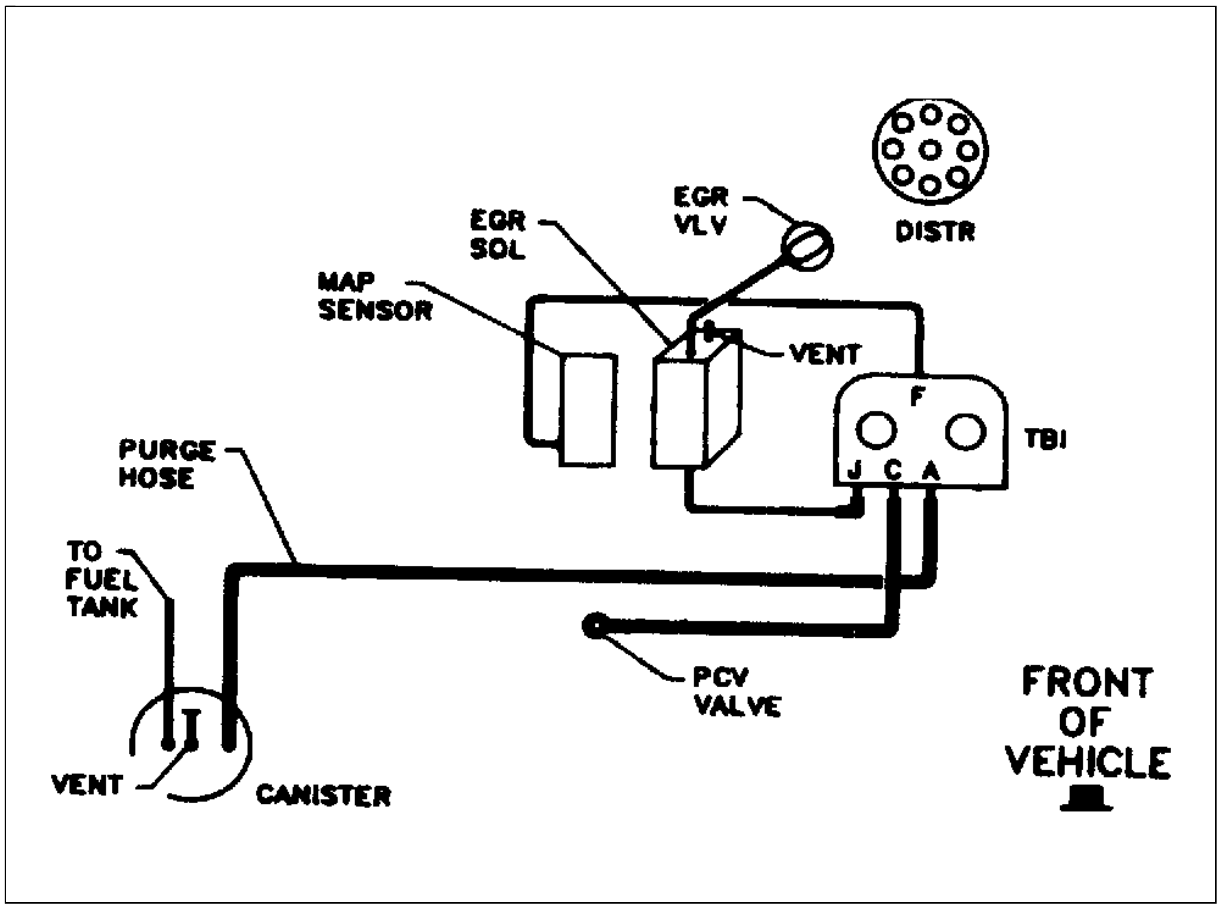

Courtesy of GENERAL MOTORS CORP.

Fig 23: Vacuum Diagram (5.7L V8, "G" Series Light Duty High Altitude A/T (DHH))

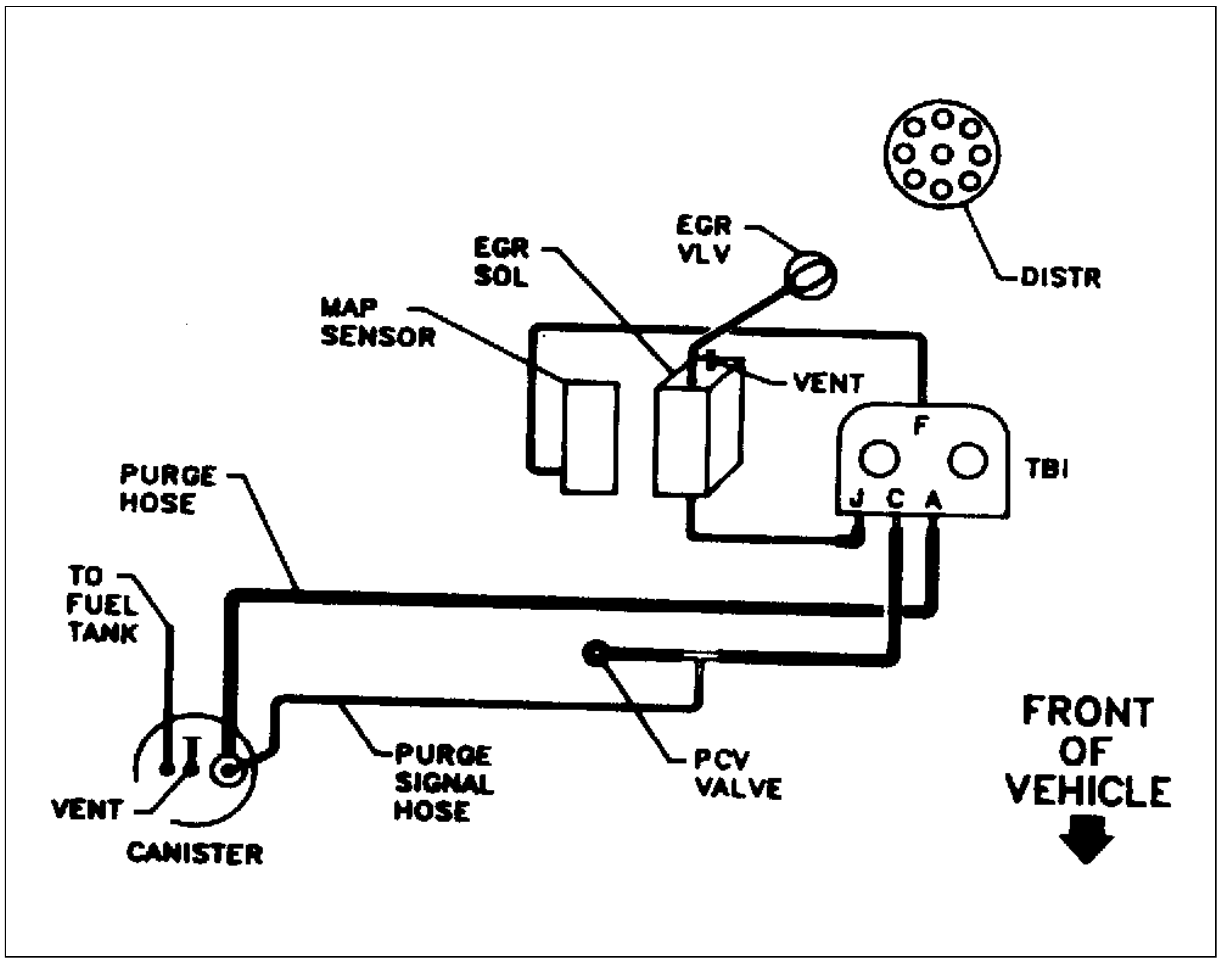

Courtesy of GENERAL MOTORS CORP.

Fig 24: Vacuum Diagram (5.7L V8, "C" & "K" Series Light Duty California A/T (DHA))

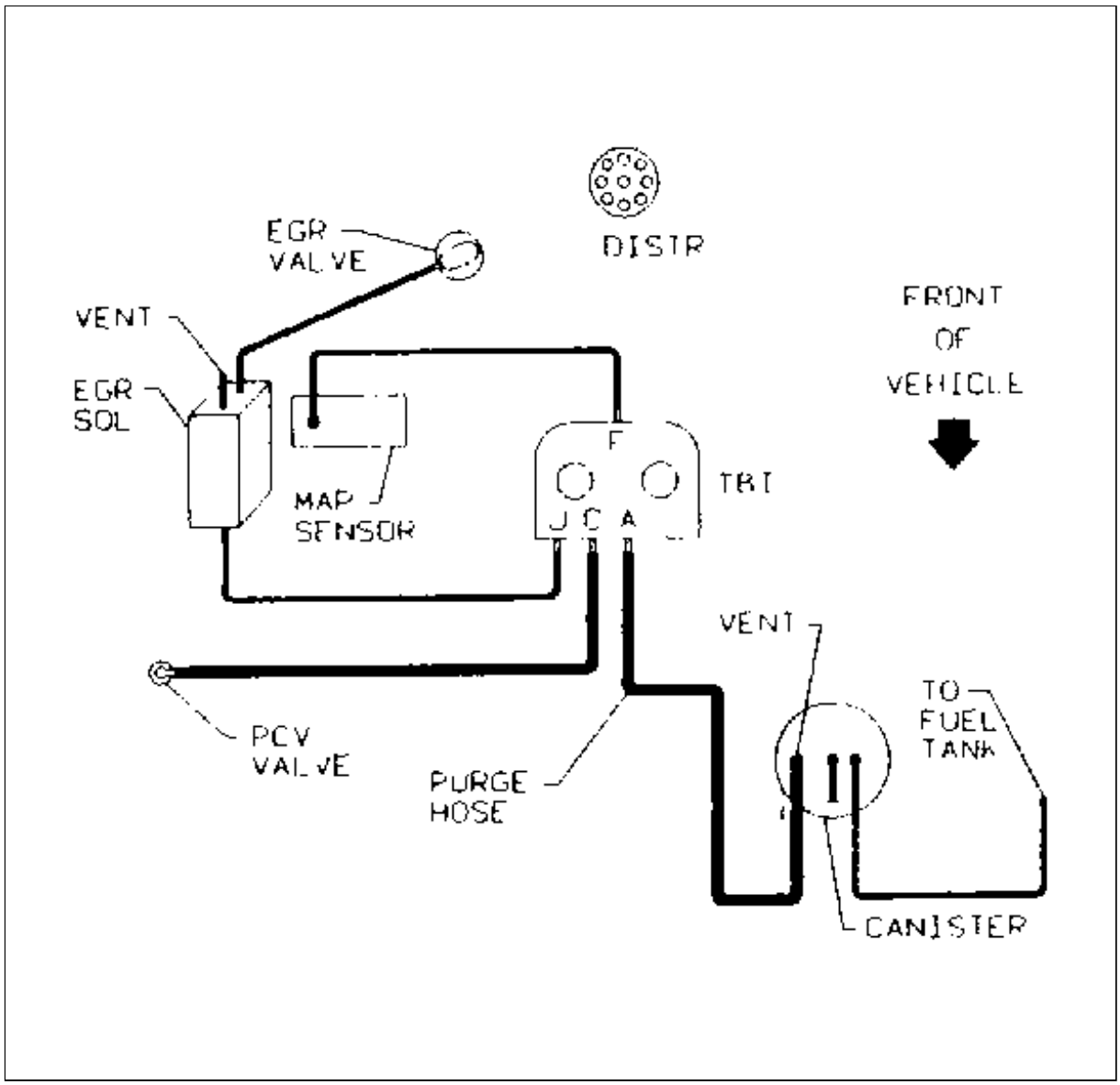

Courtesy of GENERAL MOTORS CORP.

Fig 25: Vacuum Diagram (5.7L V8, "P" Series Light Duty Federal M/T (DLN))

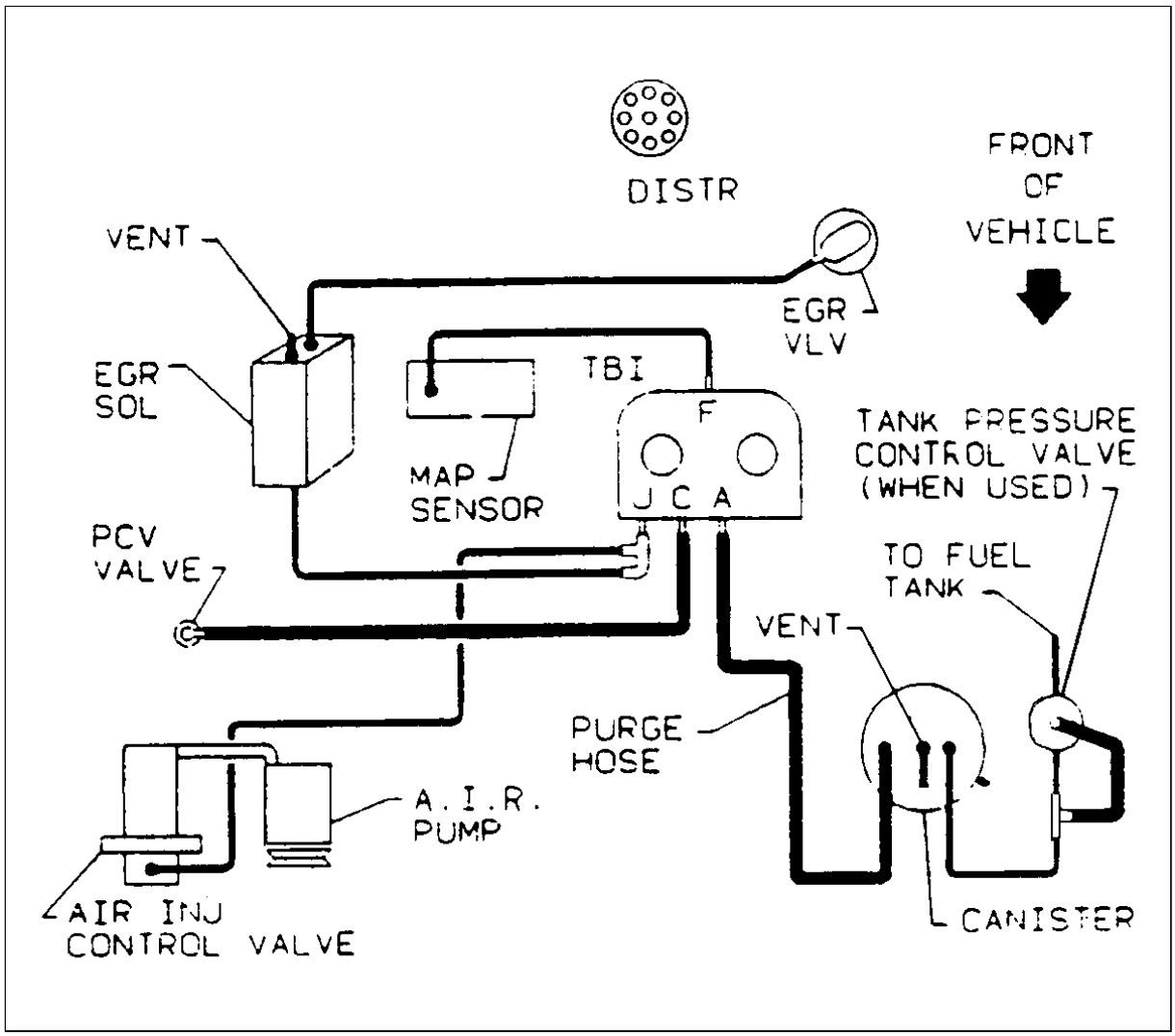

Courtesy of GENERAL MOTORS CORP.

Fig 26: Vacuum Diagram (5.7L V8, "C" & "K" Series Light Duty Federal/High Altitude A/T (DFZ))

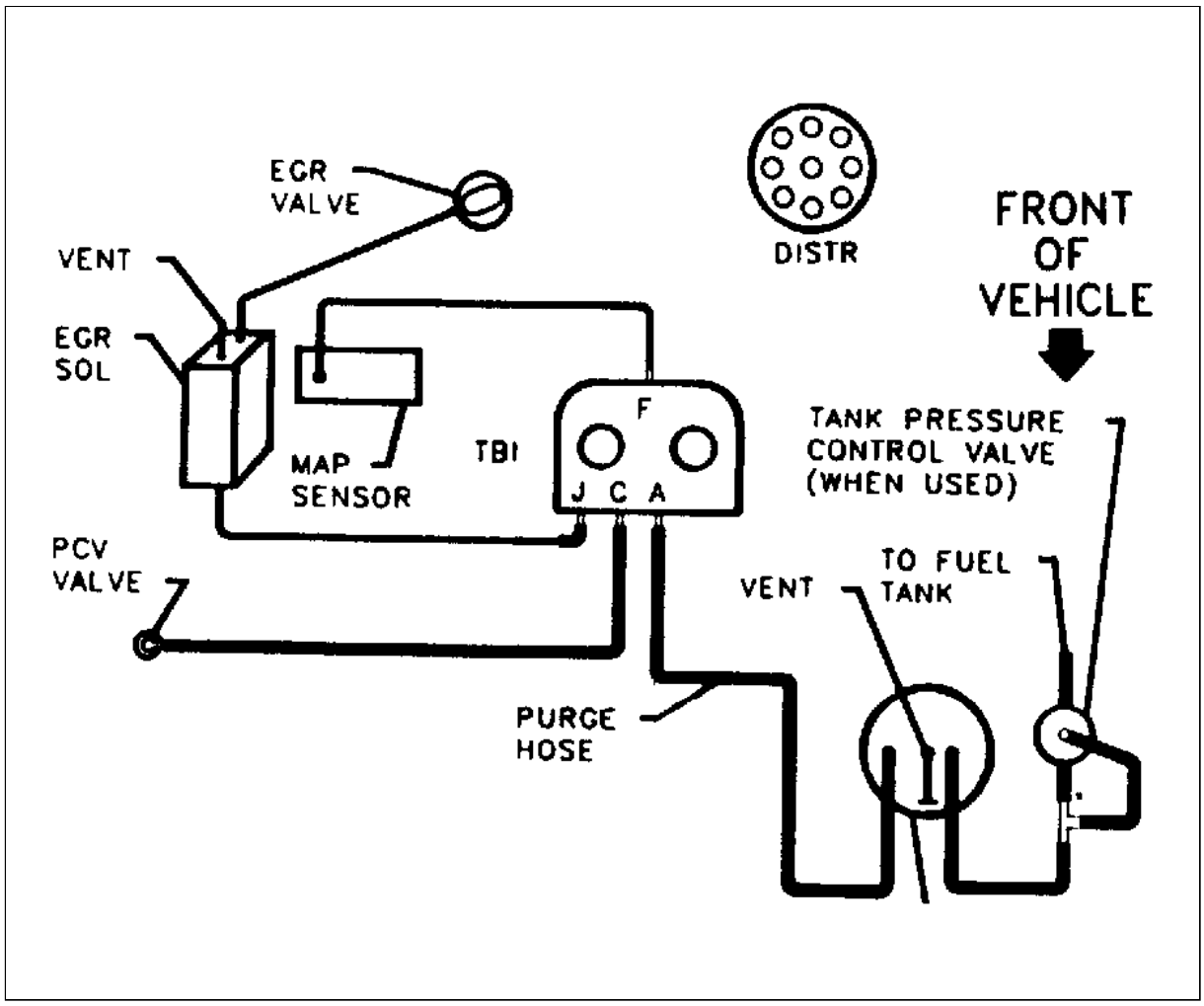

Courtesy of GENERAL MOTORS CORP.

Fig 27: Vacuum Diagram (5.7L V8, "P" Series Heavy Duty Federal All Trans. (DPJ, DPN))

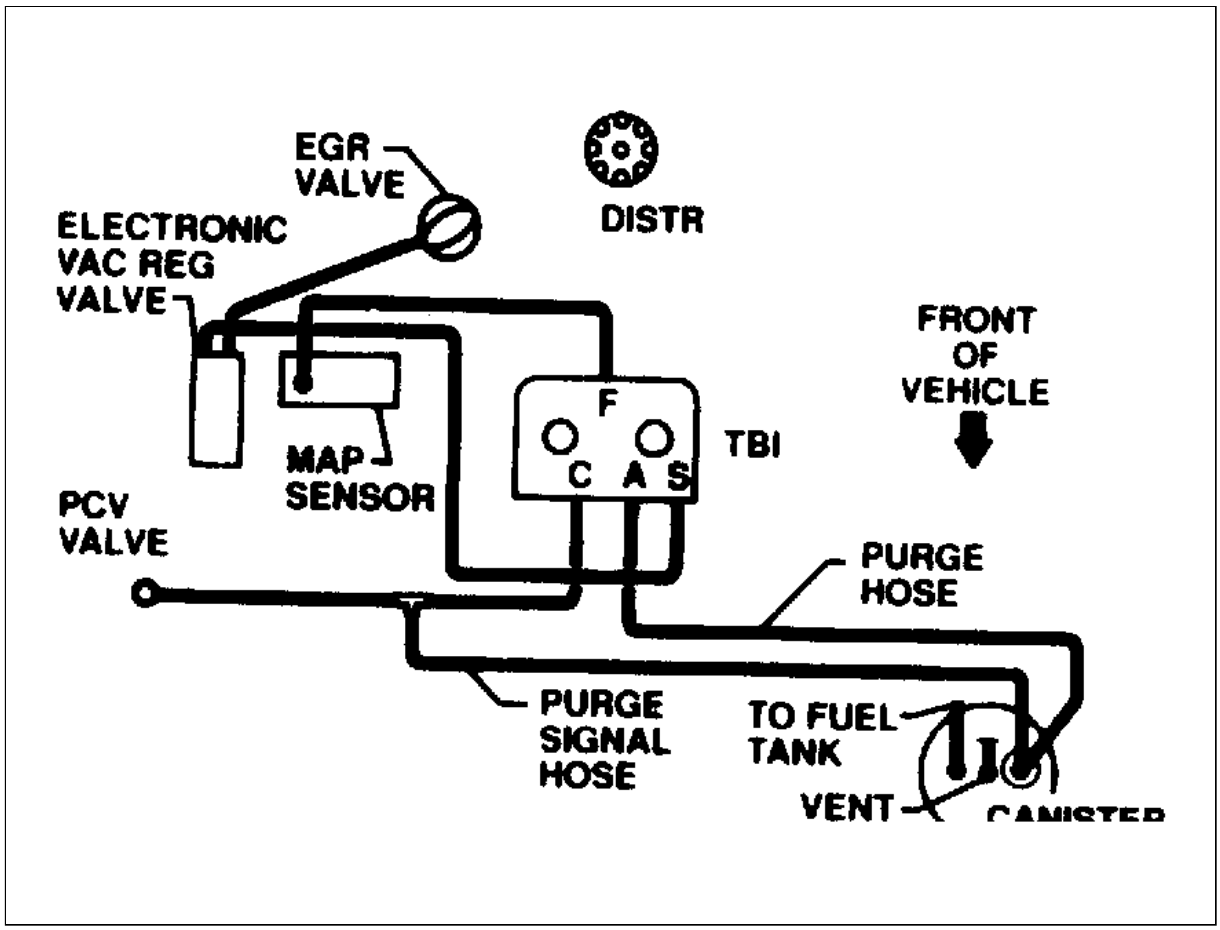

Courtesy of GENERAL MOTORS CORP.

Fig 28: Vacuum Diagram (5.7L V8, "G" Series Light Duty High Altitude A/T (DHL))

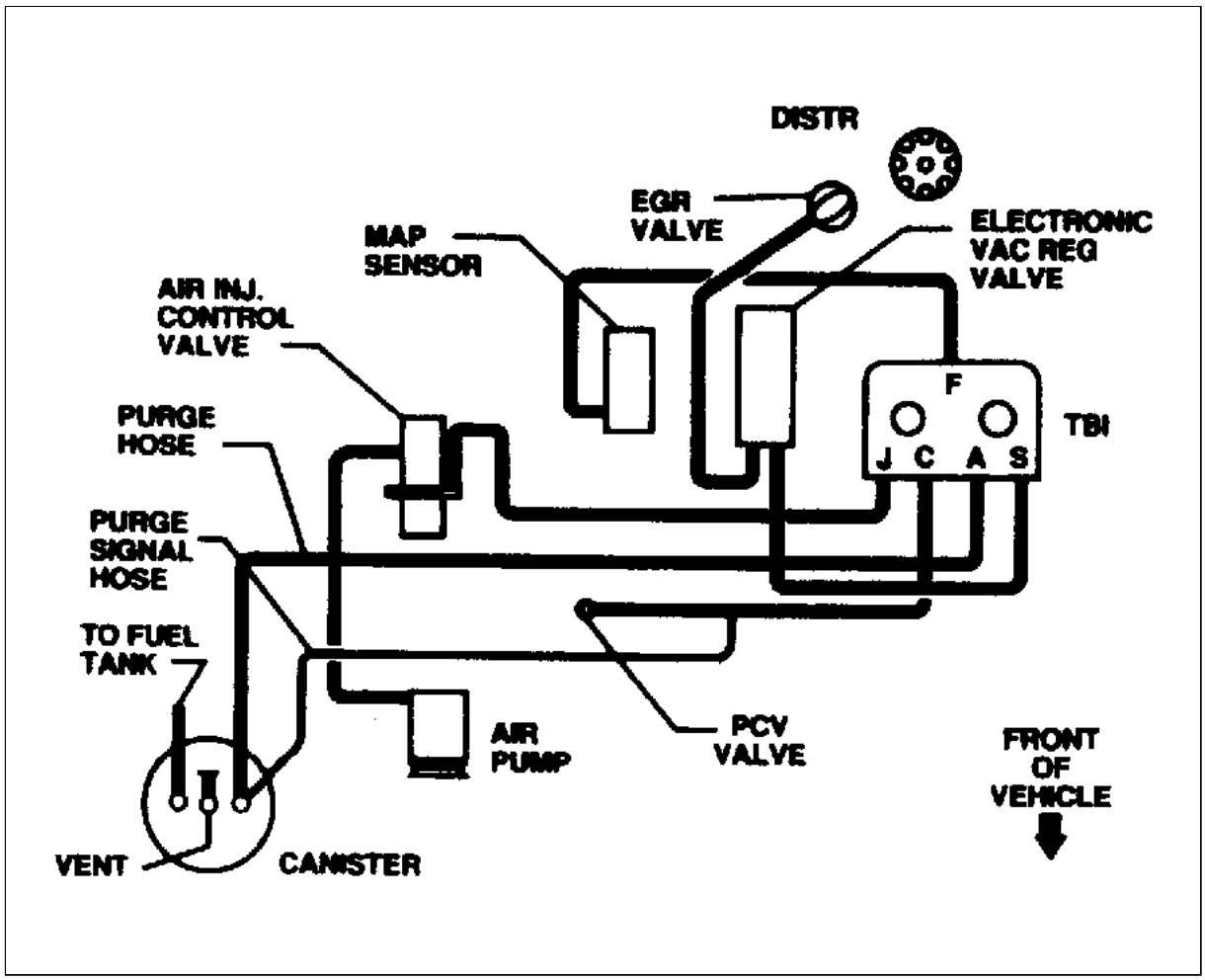

Courtesy of GENERAL MOTORS CORP.

Fig 29: Vacuum Diagram (5.7L V8, Heavy Duty Federal A/T (DPL))

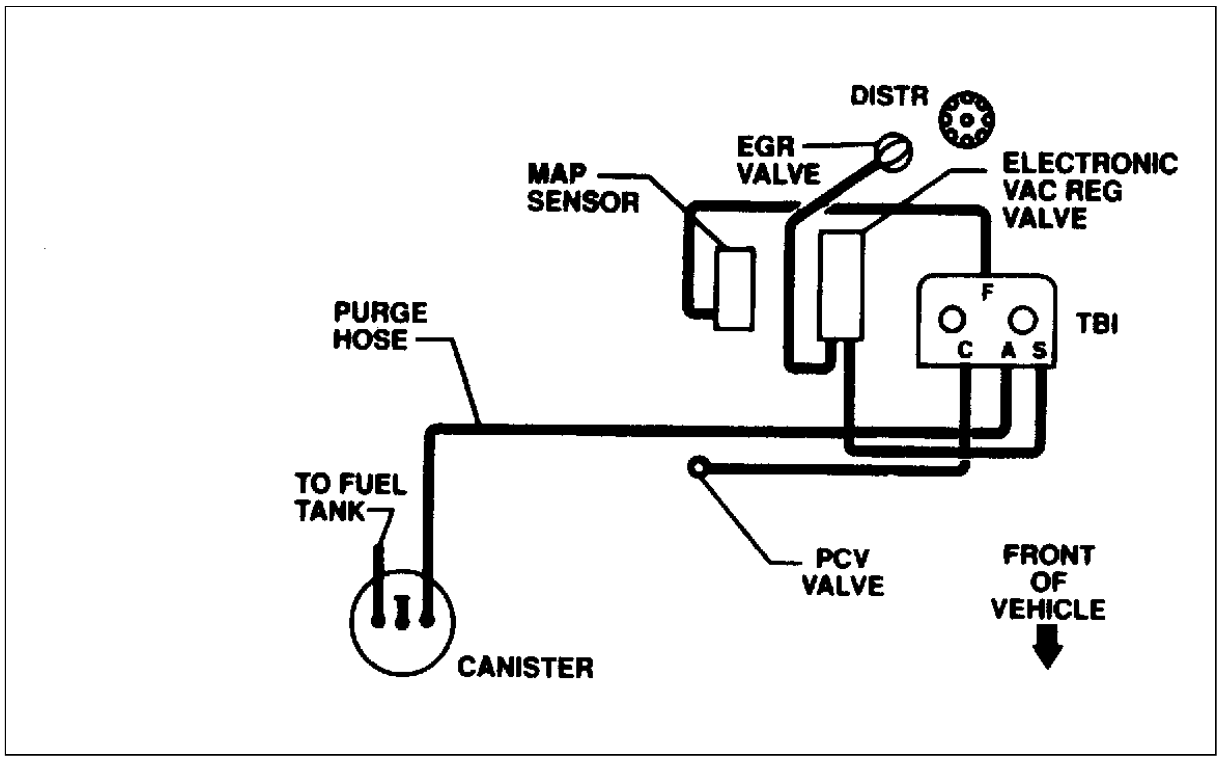

Courtesy of GENERAL MOTORS CORP.

Fig 30: Vacuum Diagram (5.7L V8, "G" Series Light Duty Federal M/T (DLR))

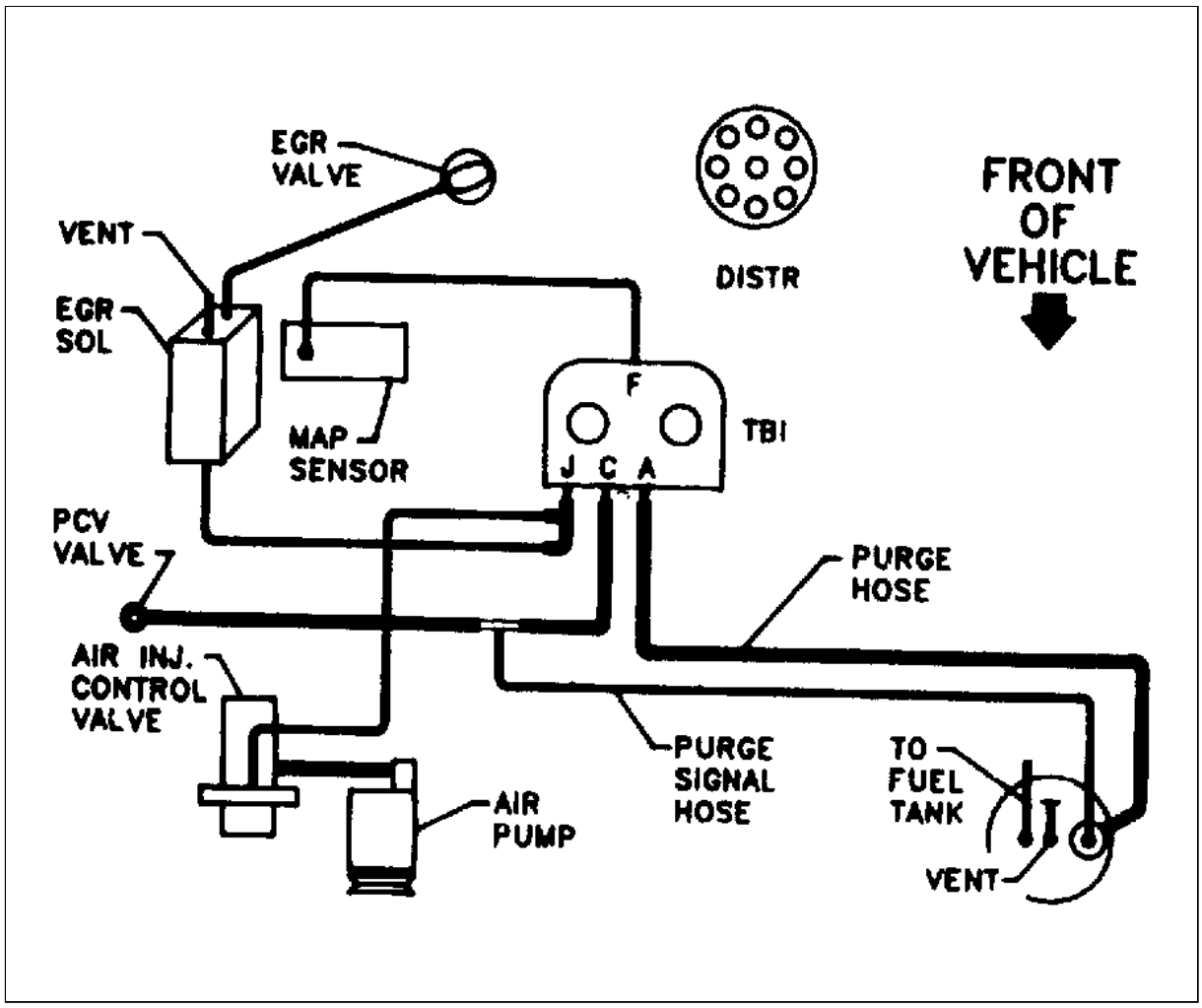

Courtesy of GENERAL MOTORS CORP.

Fig 31: Vacuum Diagram (5.7L V8, "P" Series Light Duty Federal M/T (DLP))

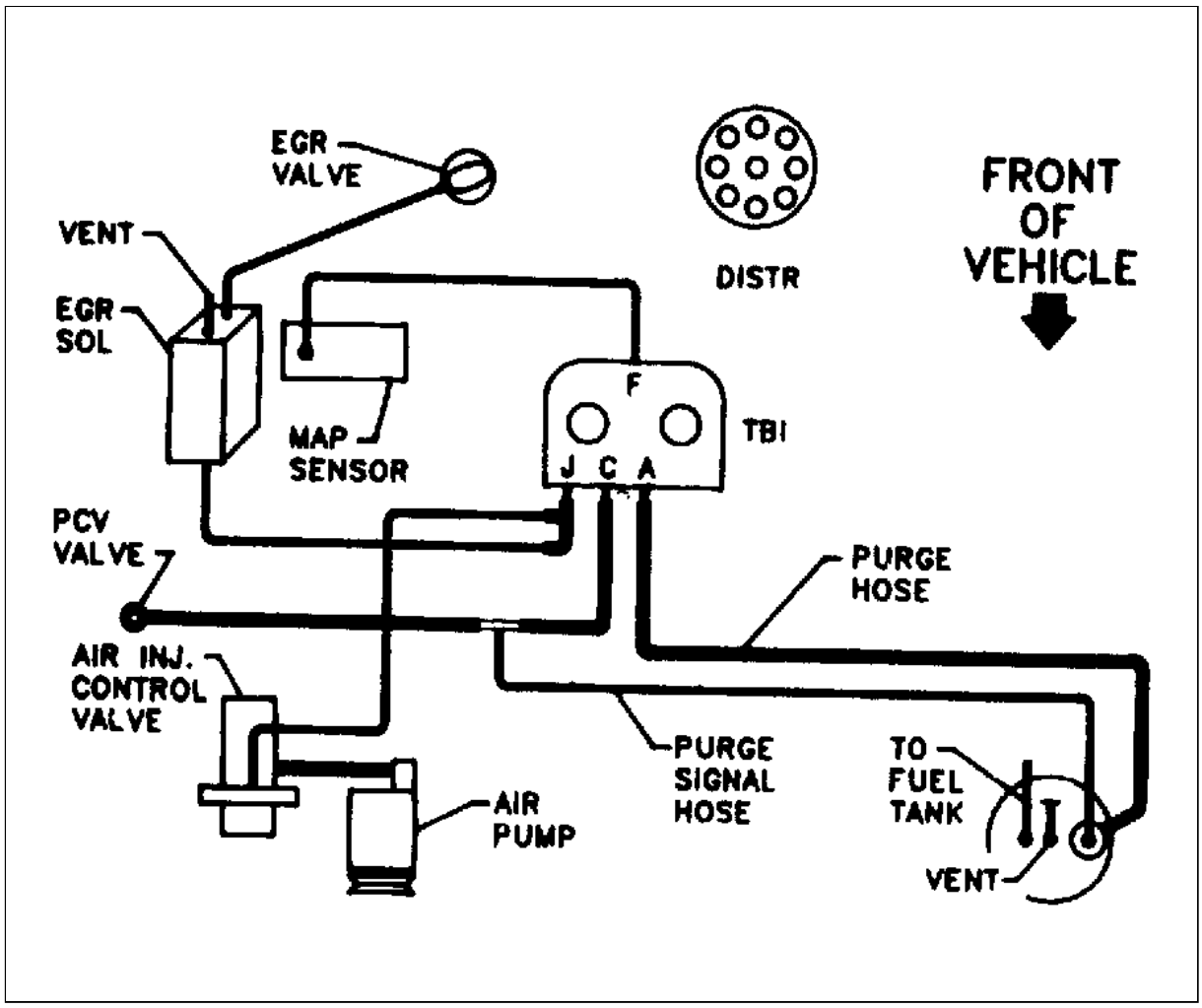

Courtesy of GENERAL MOTORS CORP.

Fig 32: Vacuum Diagram (5.7L V8, Heavy Duty California/Federal All Trans. (DPC))

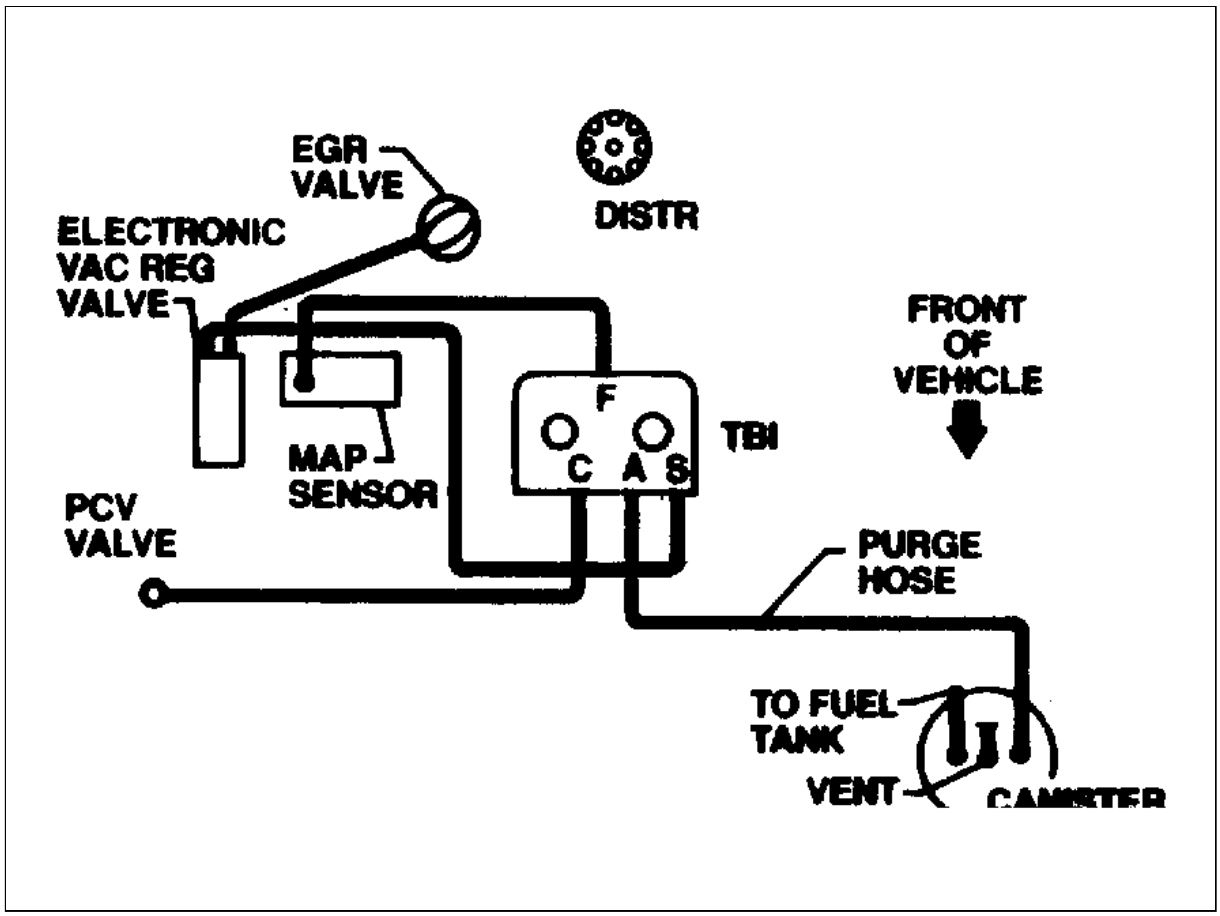

Courtesy of GENERAL MOTORS CORP.

Fig 33: Vacuum Diagram (5.7L V8, Heavy Duty Federal A/T (DPP))

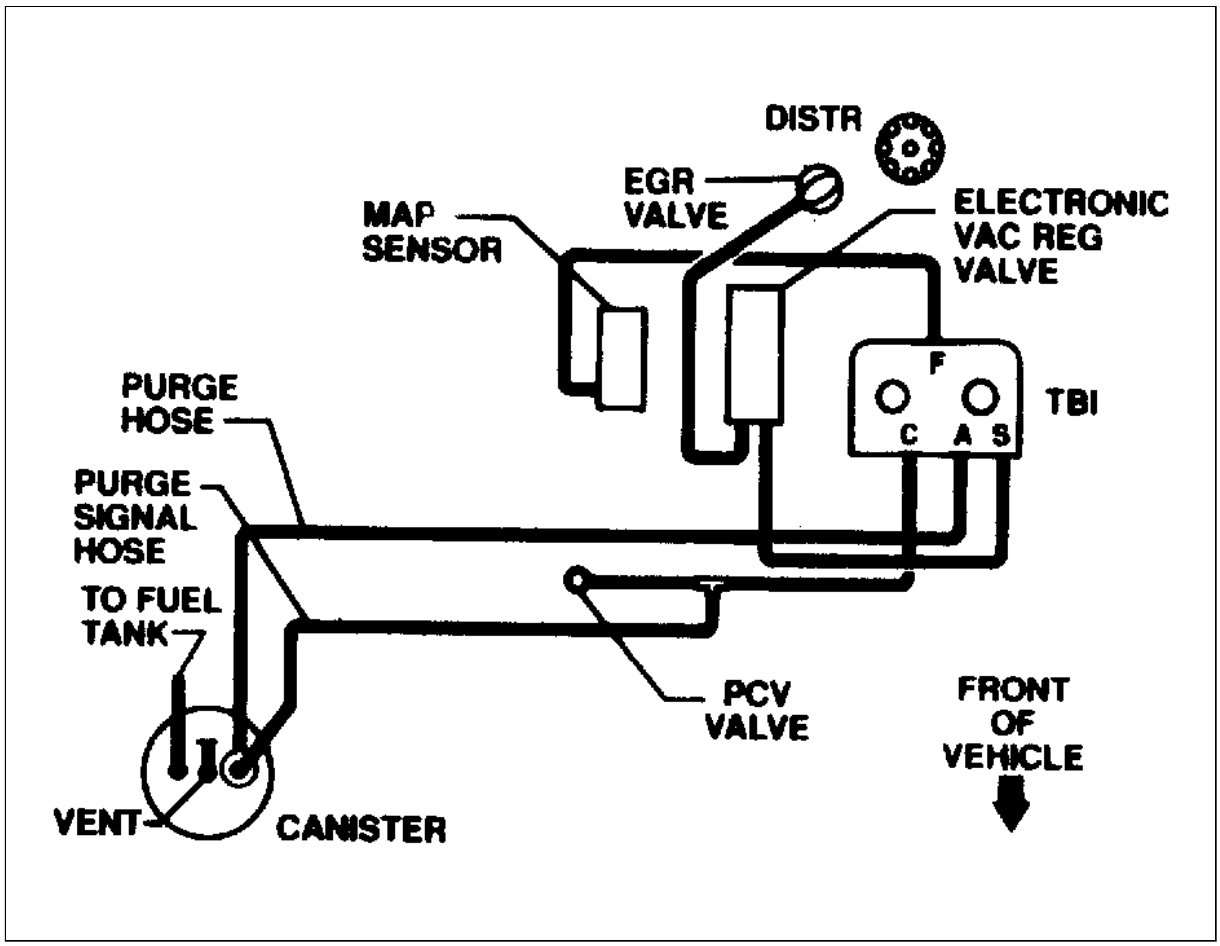

Courtesy of GENERAL MOTORS CORP.

Fig 34: Vacuum Diagram (6.2L V8 Diesel, "G" Series Heavy Duty High Altitude All Trans. (WJH, WJL) or Heavy Duty Federal All Trans. (WJF, WJK))

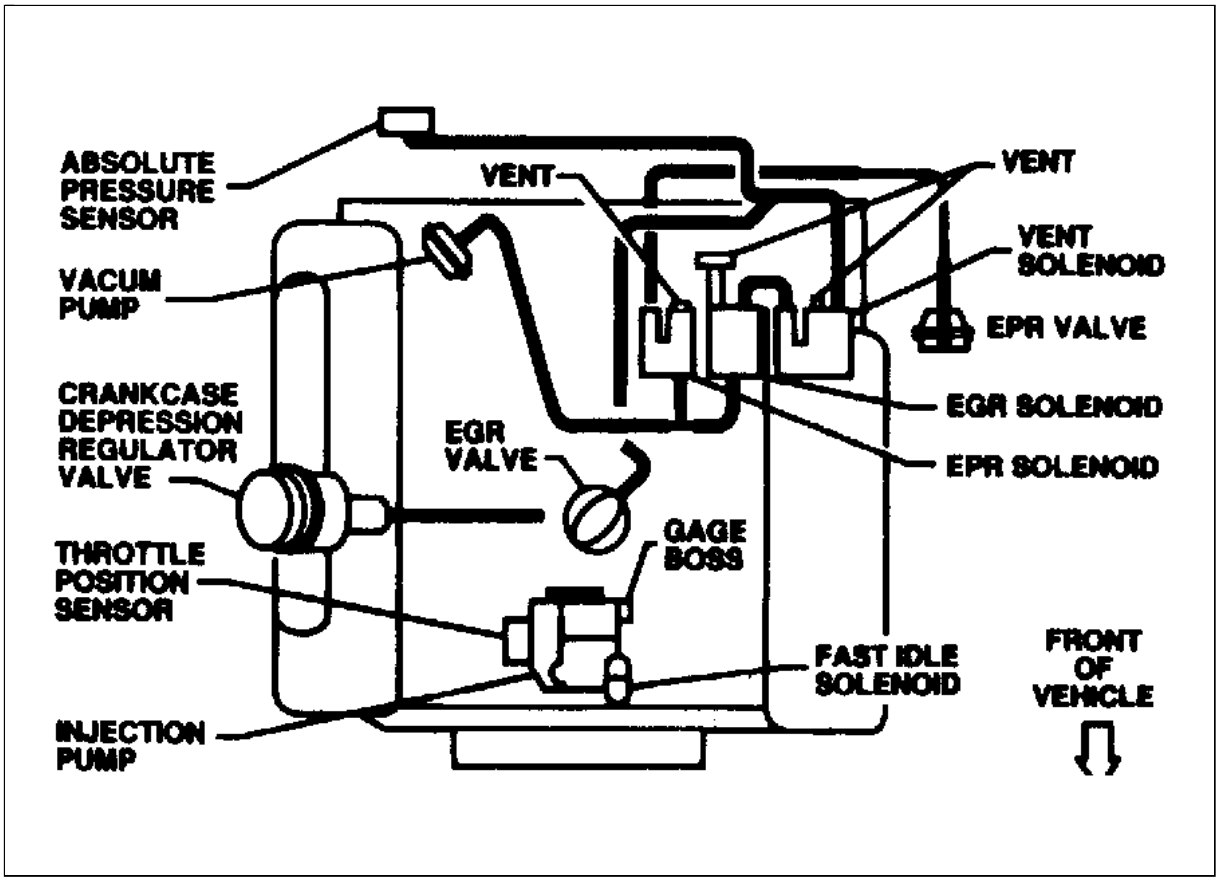

Courtesy of GENERAL MOTORS CORP.

Fig 35: Vacuum Diagram (7.4L V8, "P" Series California Heavy Duty A/T (DKM, DKY) or Federal Heavy Duty A/T (DKU))

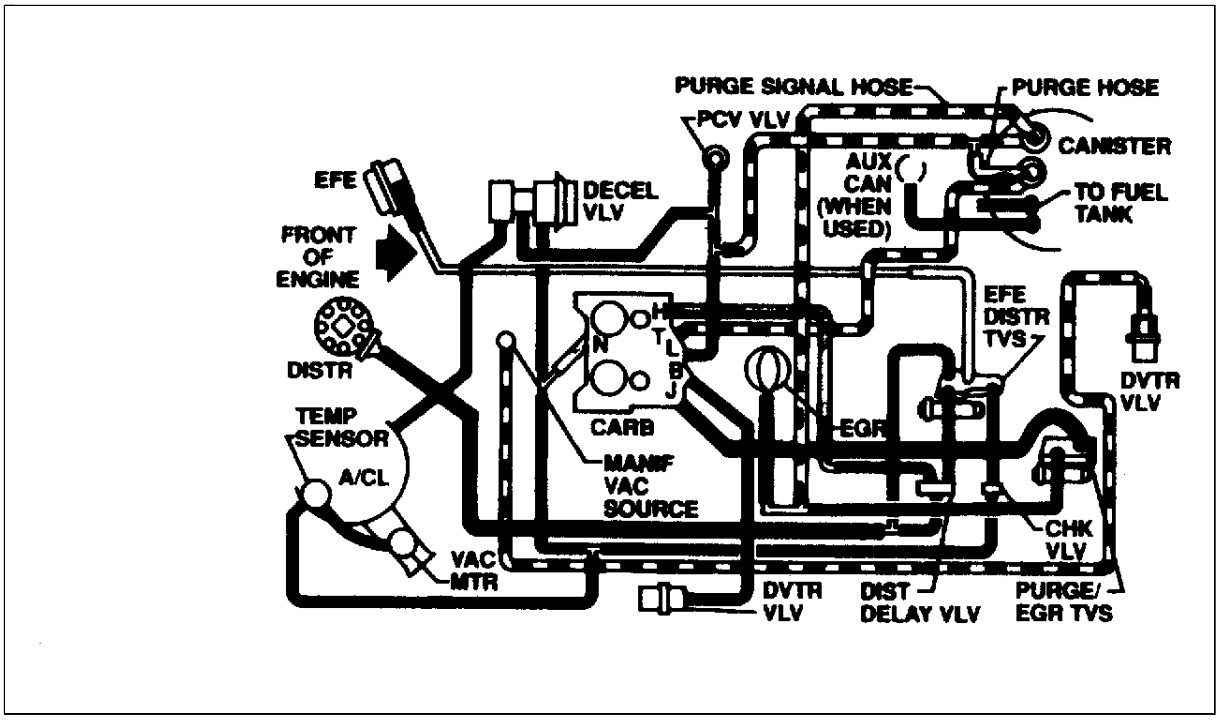

Courtesy of GENERAL MOTORS CORP.

Fig 36: Vacuum Diagram (7.4L V8, "P" Series California Heavy Duty A/T (DKX, DKH) or Federal Heavy Duty A/T (DKL, DKT))

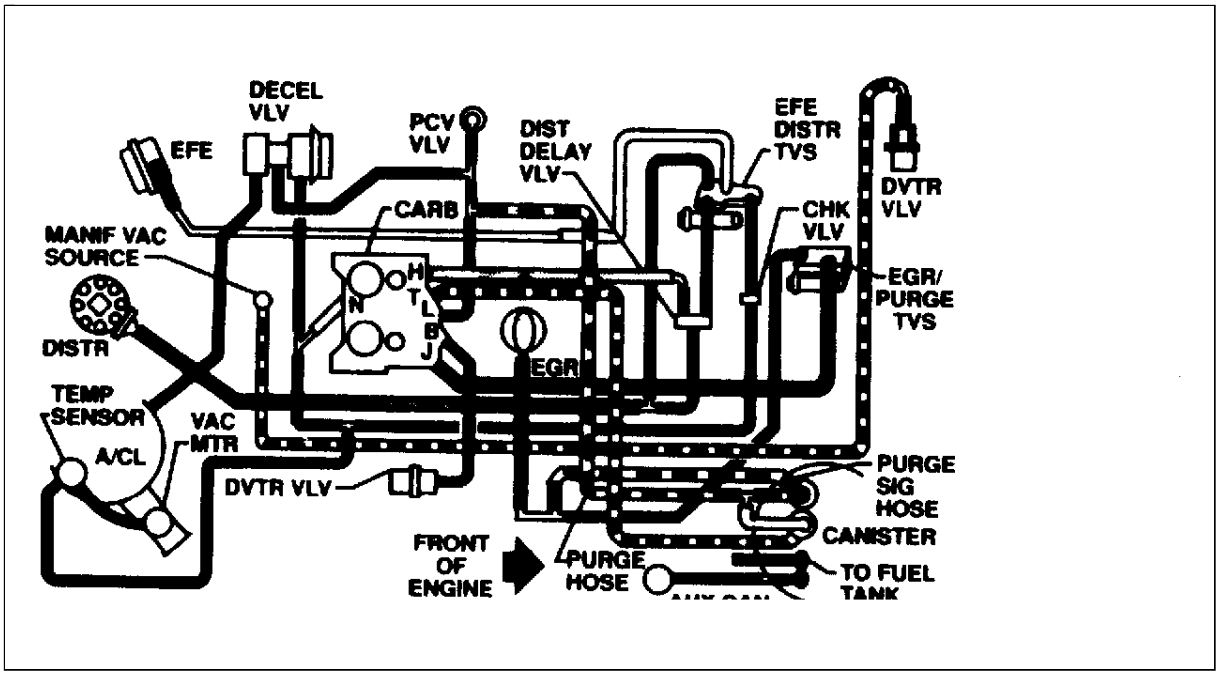

Courtesy of GENERAL MOTORS CORP.

Fig 37: Vacuum Diagram (7.4L V8, "R" Series California Heavy Duty All Trans. (DJP, DJC))

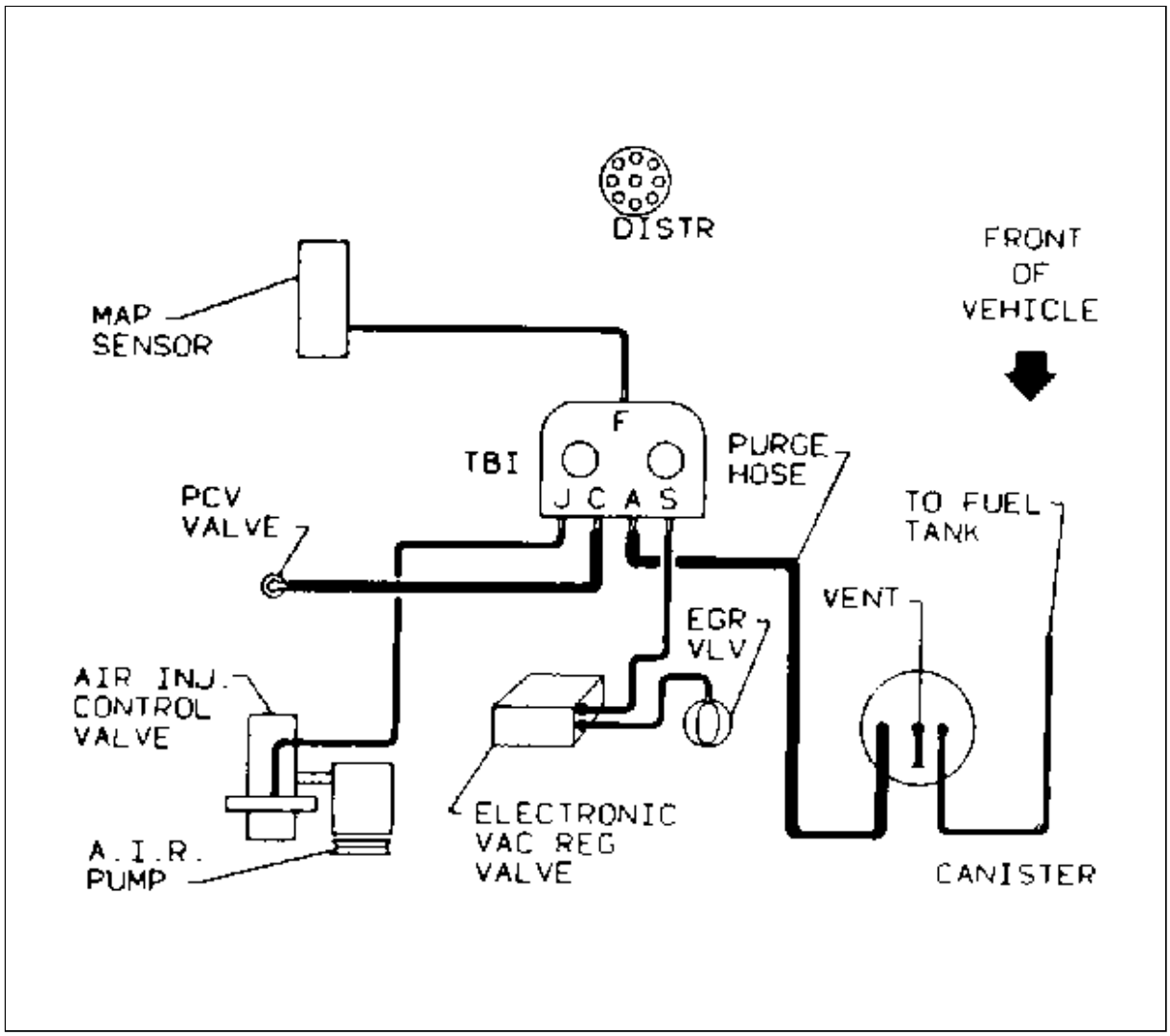

Courtesy of GENERAL MOTORS CORP.

Fig 38: Vacuum Diagram (7.4L V8, "G" Series California Heavy Duty A/T (DKA))

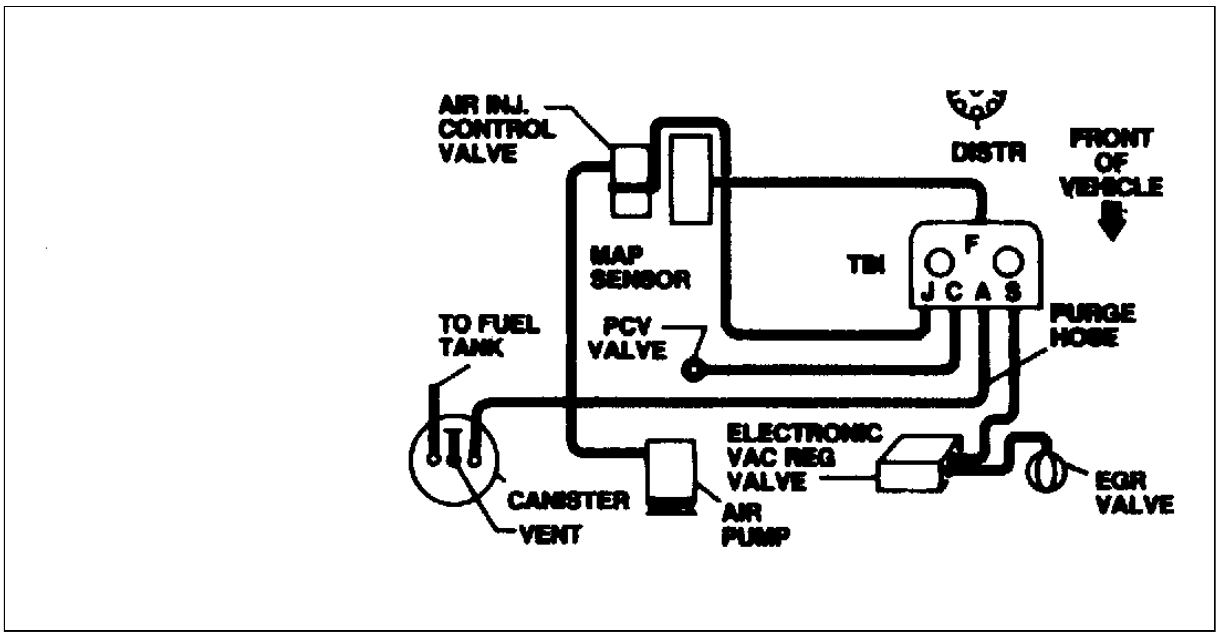

Courtesy of GENERAL MOTORS CORP.

Fig 39: Vacuum Diagram (7.4L V8, "G" Series High Altitude Heavy Duty A/T (DJY, DJW))

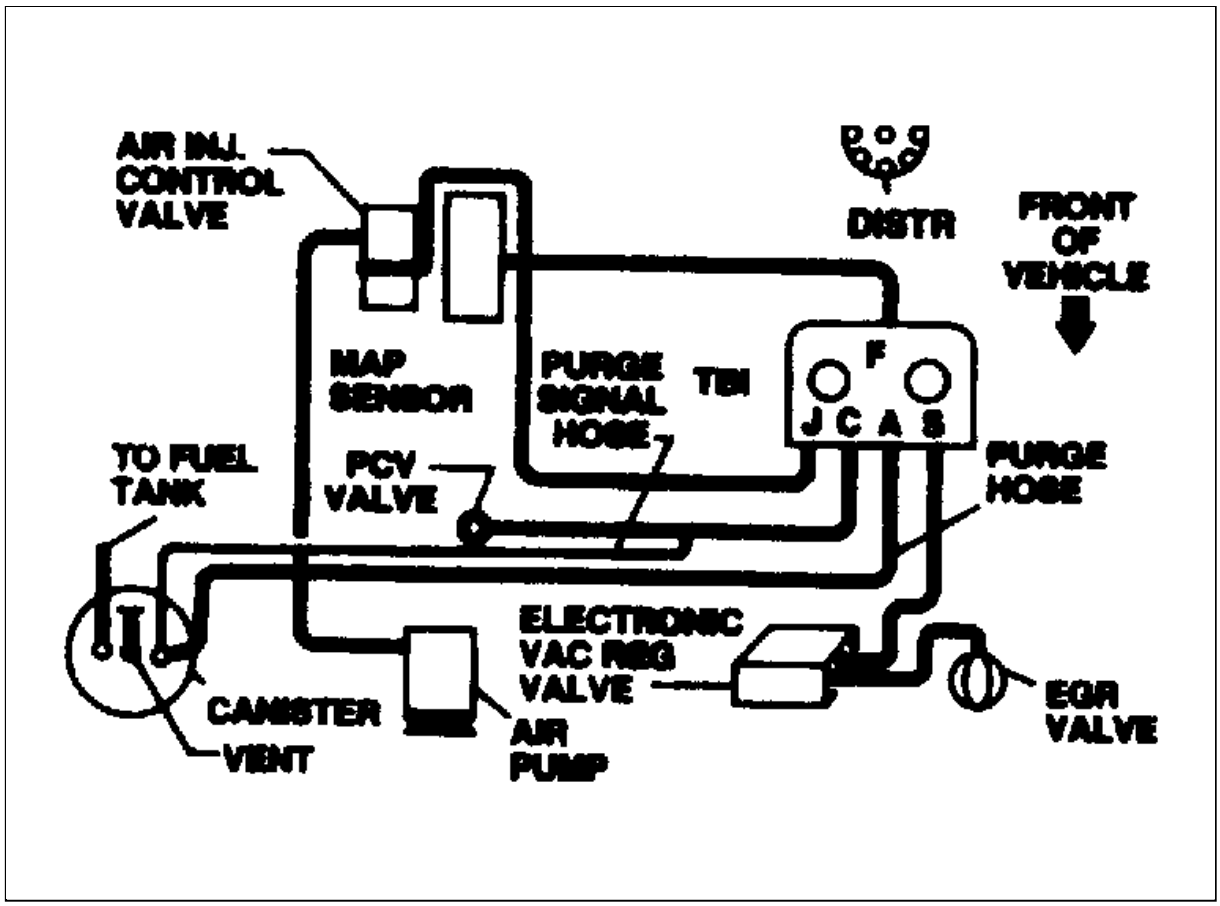

Courtesy of GENERAL MOTORS CORP.

Fig 40: Vacuum Diagram (7.4L V8, "C" & "K" Series Federal/High Altitude Heavy Duty All Trans. (DHY))

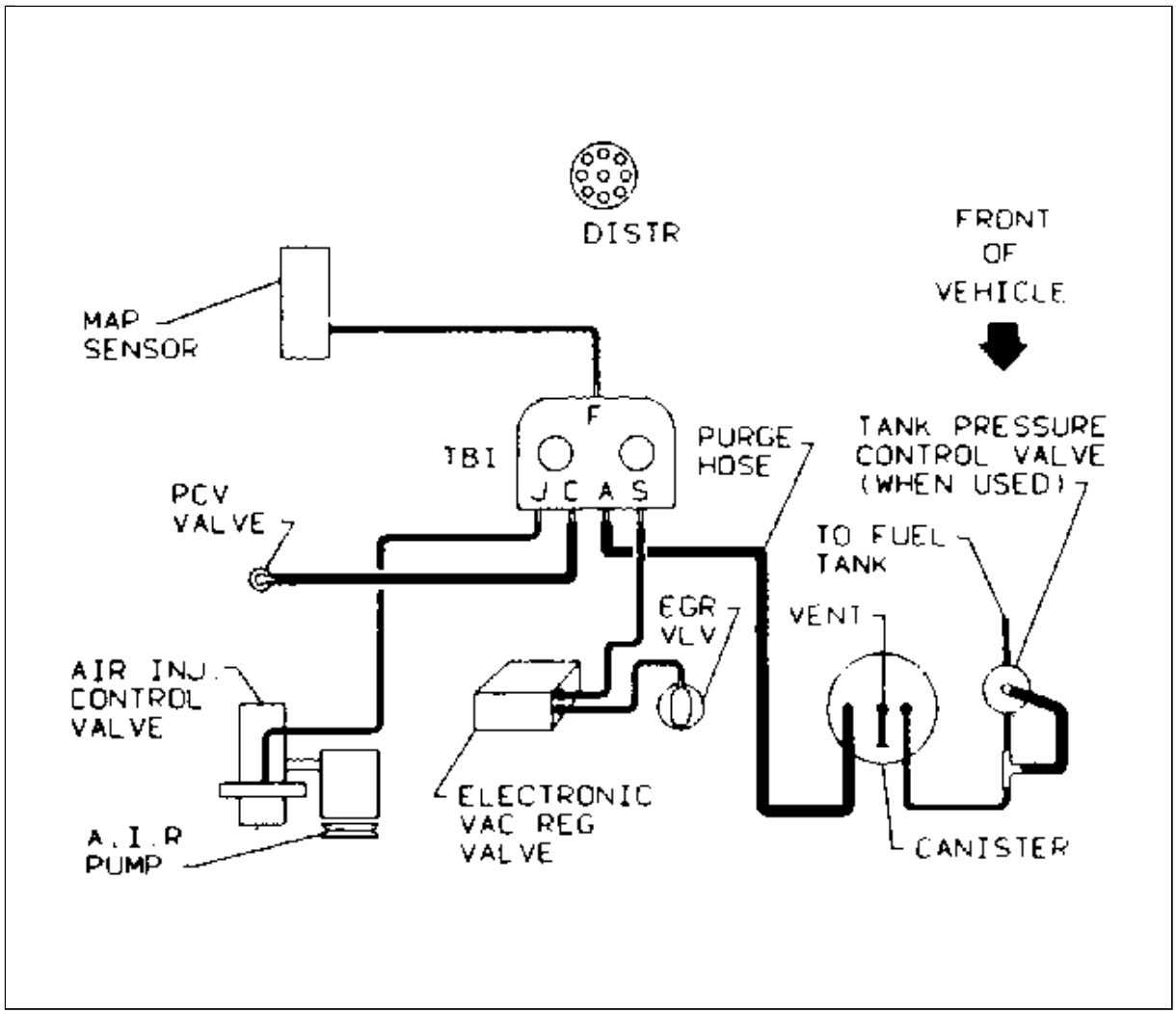

Courtesy of GENERAL MOTORS CORP.

Fig 41: Transfer Case Vacuum Diagram (S10, S15, S/T Blazer & S/T Jimmy 4WD)

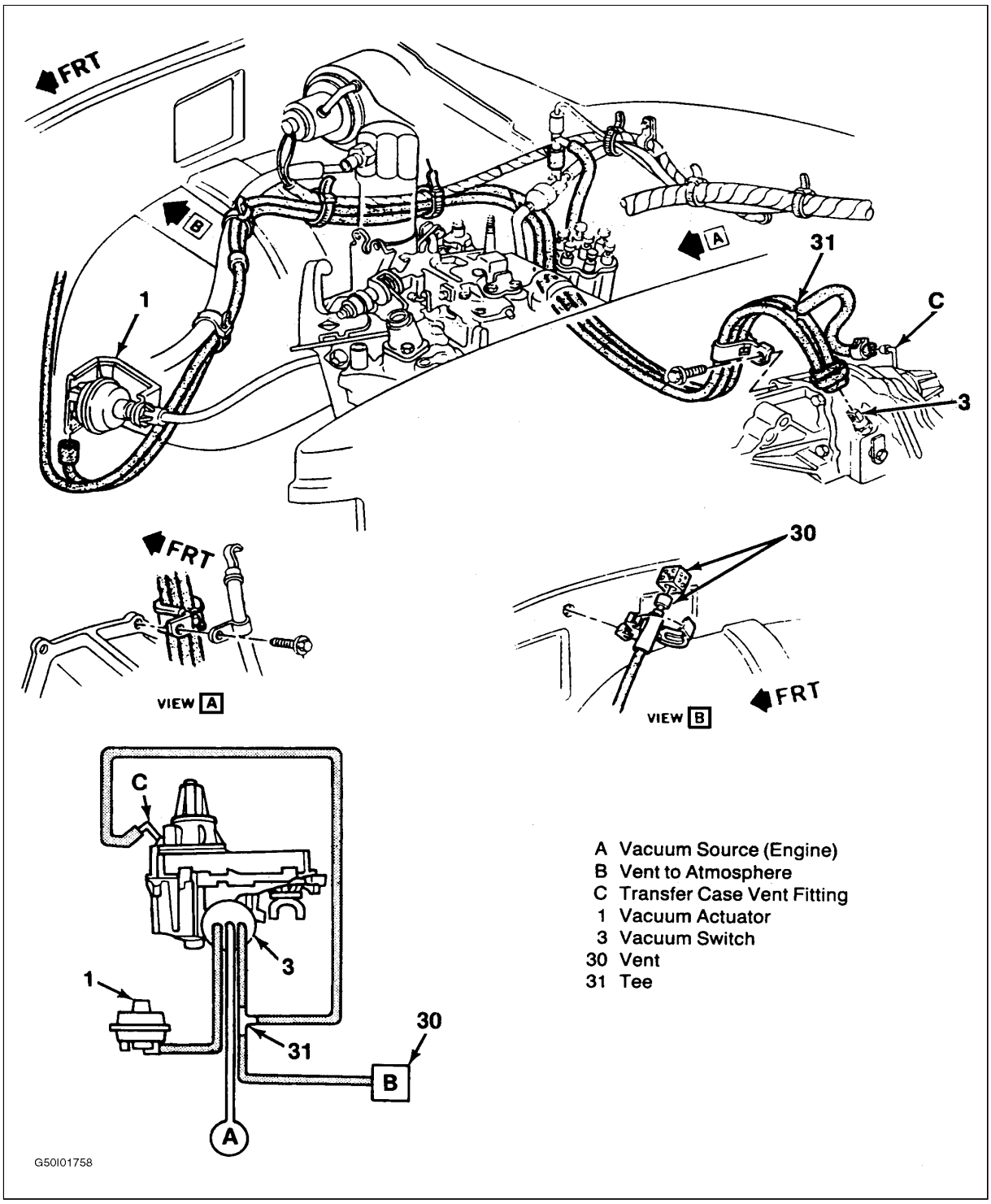

Courtesy of GENERAL MOTORS CORP.