PRODEMAND

1968 Ford Thunderbird 7.0L Eng Base

Fig 2: Wiring Diagrams - Ford V8 Thunderbird

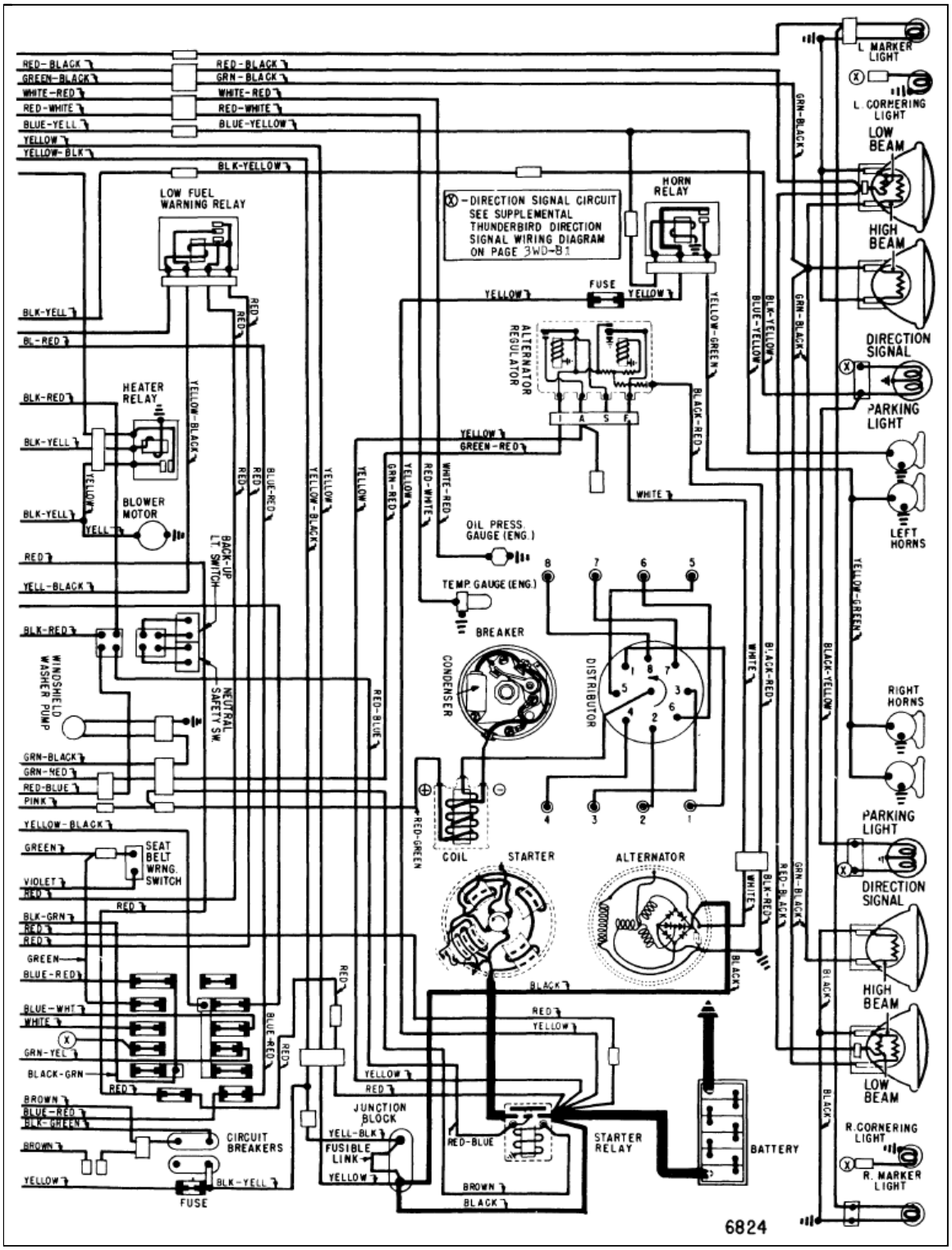

Courtesy of FORD MOTOR CO.