PRODEMAND

1998 GMC Jimmy 4.3L Eng

Service Manual: SYSTEM WIRING DIAGRAMS

ENGINE PERFORMANCE > 4.3L

Fig 1: 4.3L (VIN W), Engine Performance Circuits (1 of 4)

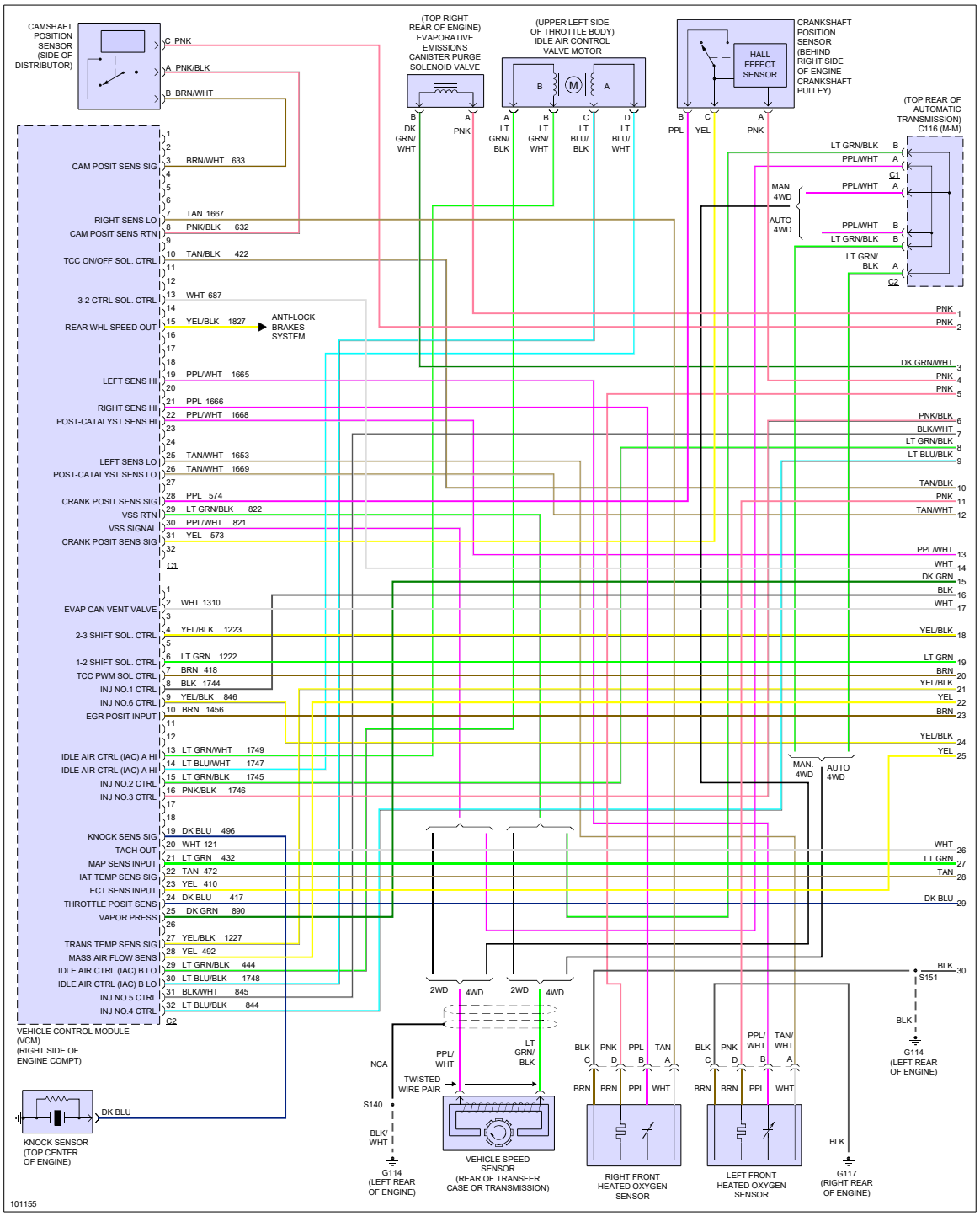

Fig 2: 4.3L (VIN W), Engine Performance Circuits (2 of 4)

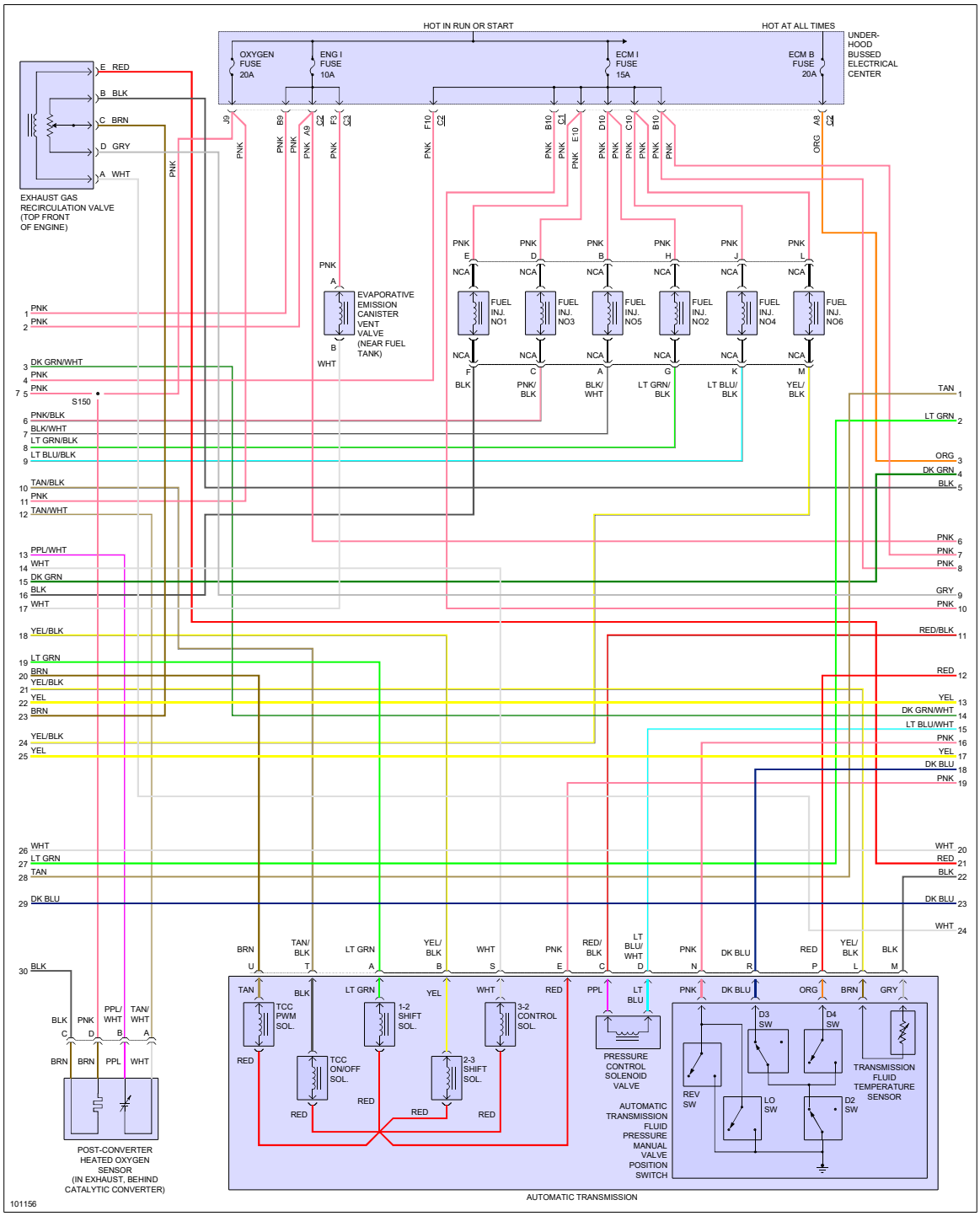

Fig 3: 4.3L (VIN W), Engine Performance Circuits (3 of 4)

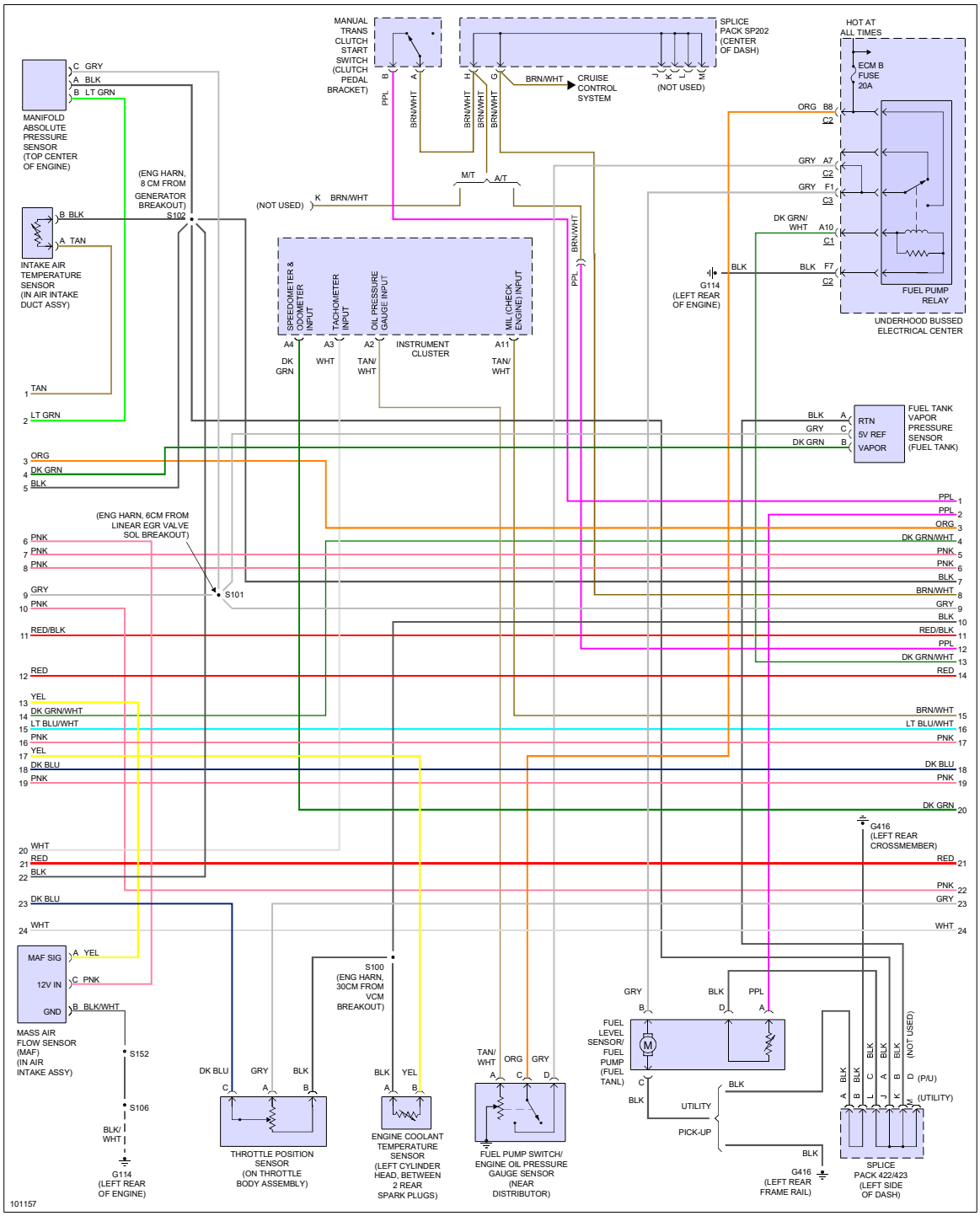
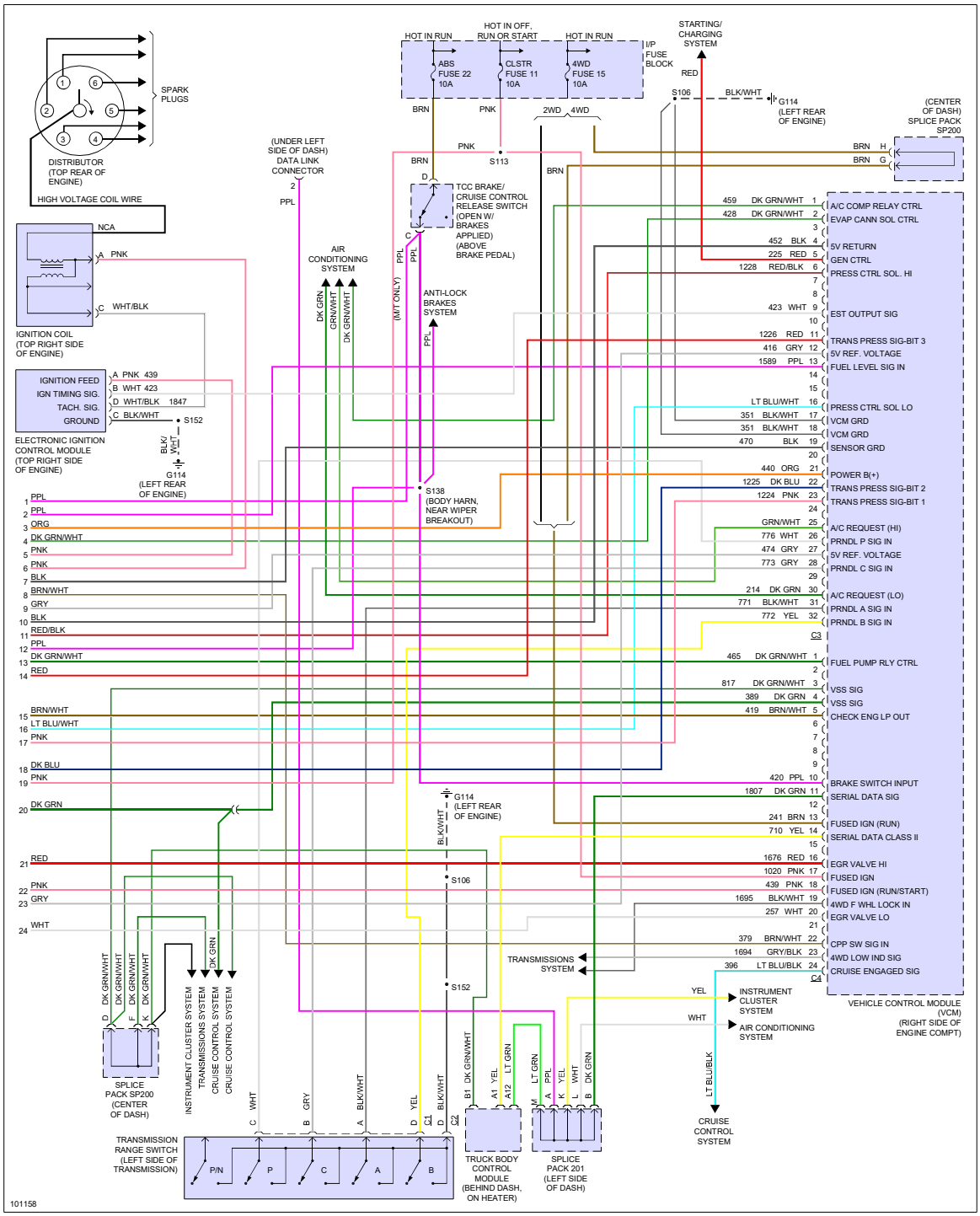
Fig 4: 4.3L (VIN W), Engine Performance Circuits (4 of 4)