PRODEMAND

2003 Cadillac DeVille 4.6L Eng Base
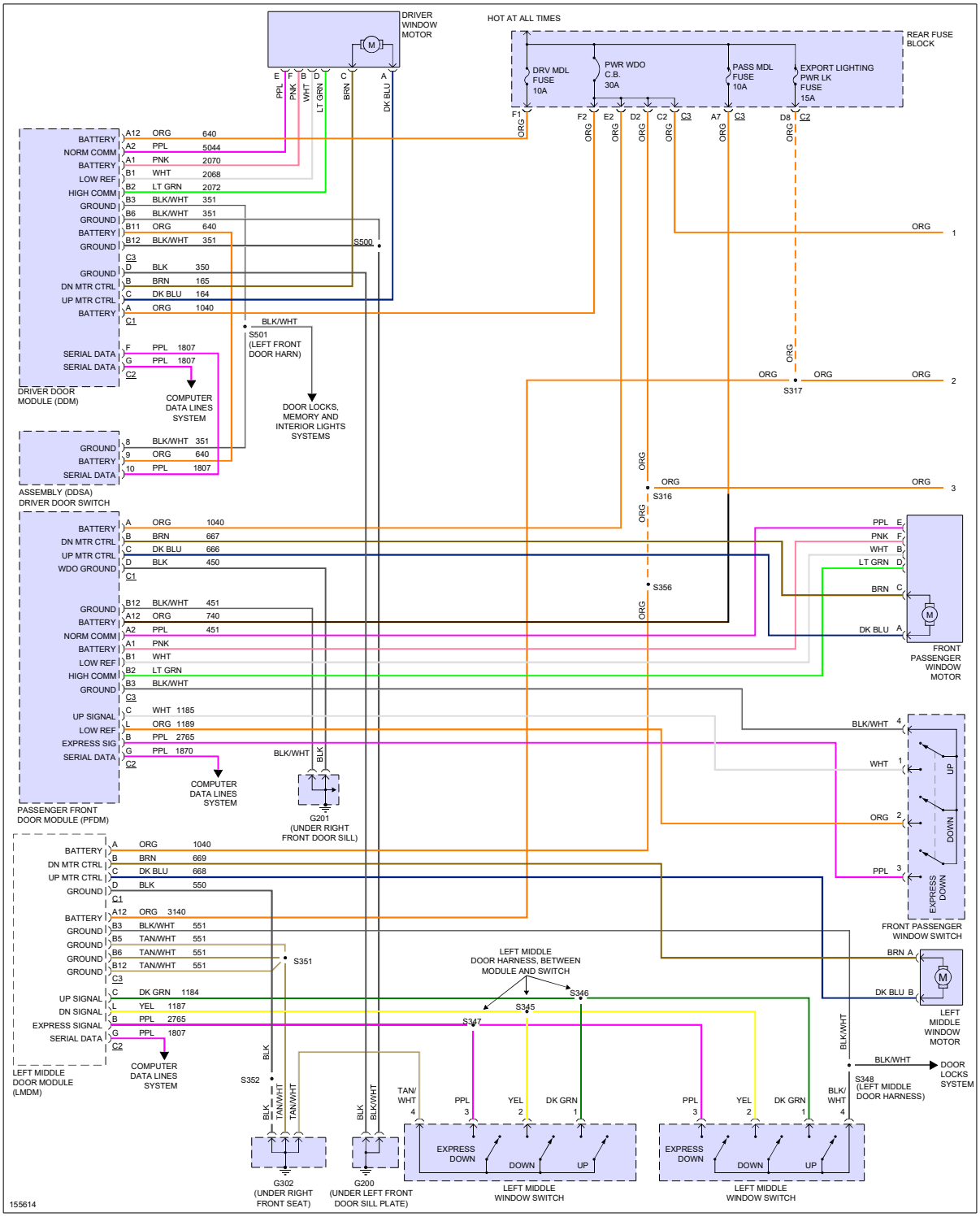
Fig 1: Power Windows Circuit (1 of 2)