PRODEMAND

2000 Ford Expedition 5.4L Eng

Service Manual: SYSTEM WIRING DIAGRAMS

POWER WINDOWS
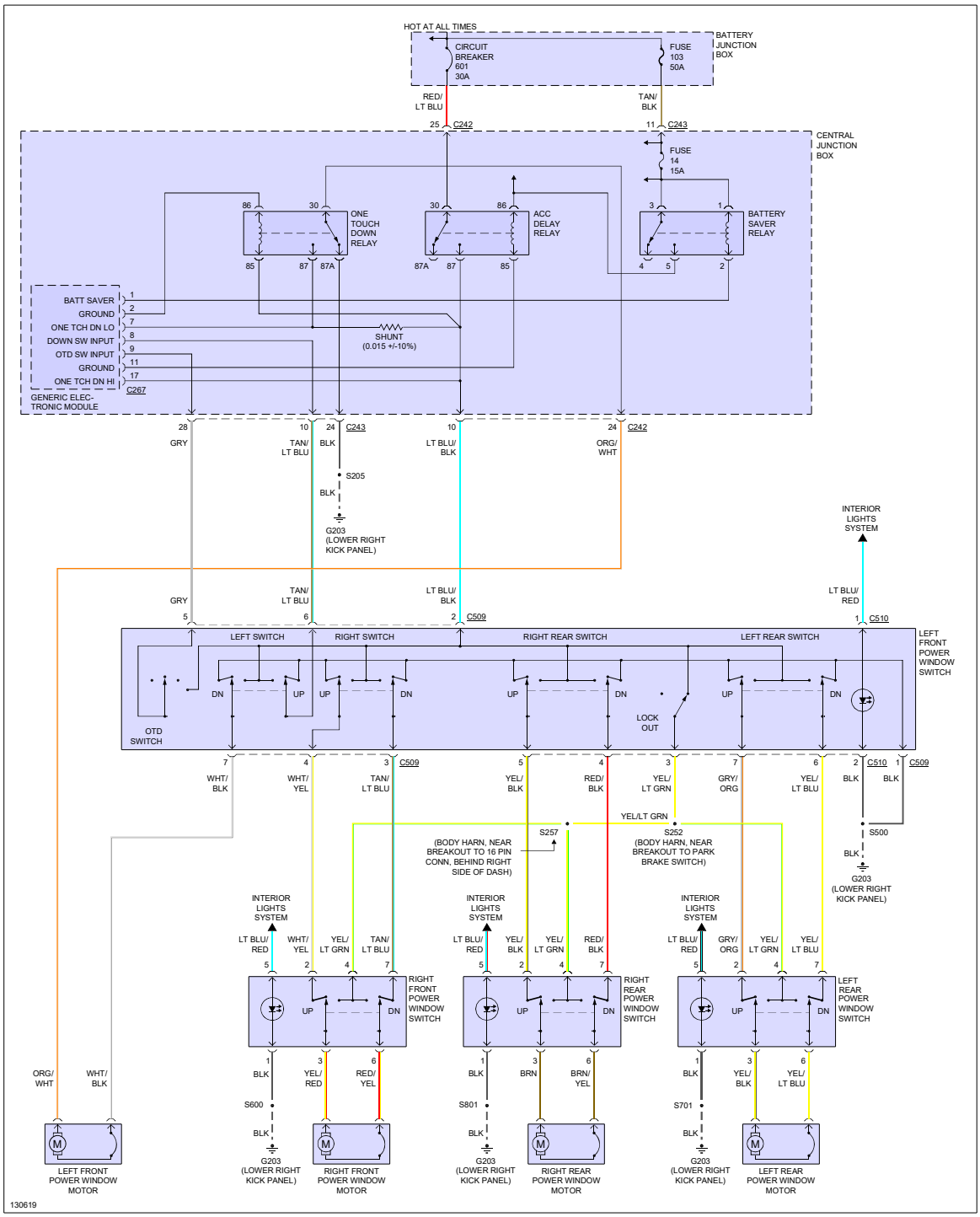
Fig 1: Power Window Circuit