BX2230D -> ENGINE -> 120100 STOP SOLENOID

Update Date: 08/25/2014, Printing Date: 09/14/2014

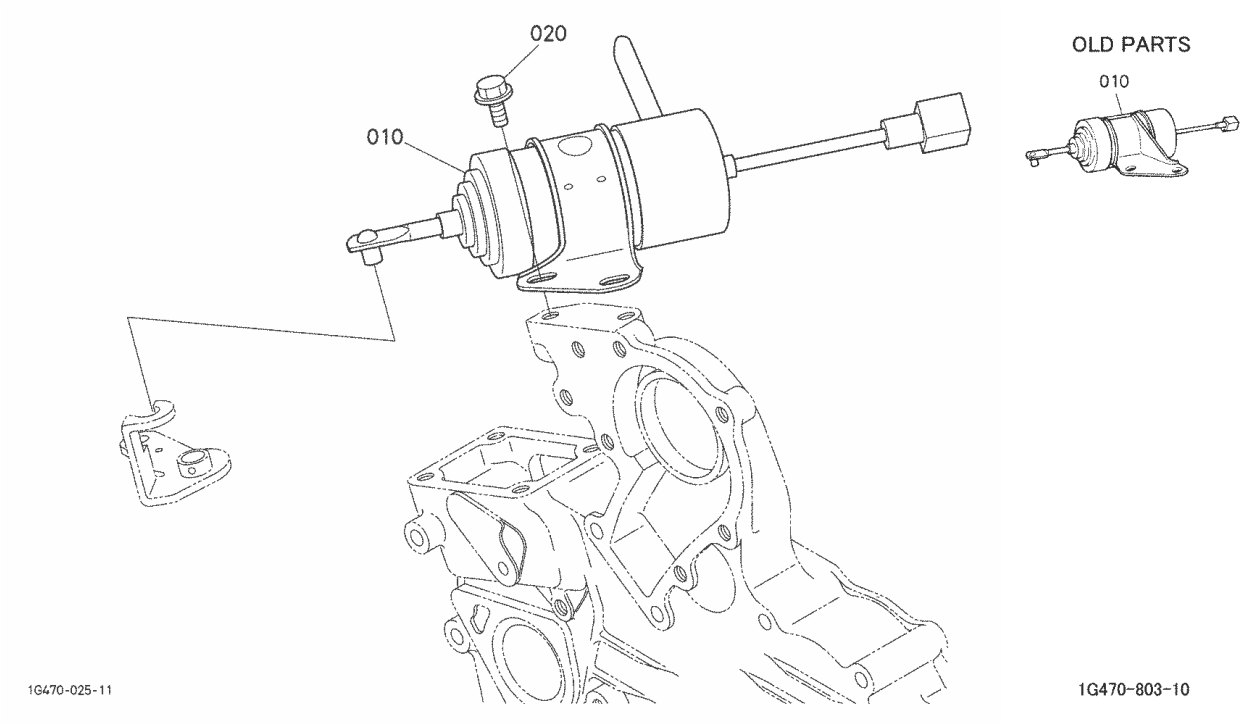

No	Part Number	Part Name	Qty	IC	S/N	Remarks	Ibs
010	16851-60010	SOLENOID,STOP	1			ORDER BY REF.No.010 NEW PART.	0.968
010	16851-60012	SOLENOID,STOP	1	=	<=5R4156	ORDER BY REF.No.010 NEW PART.	0.88
010	16851-60013	SOLENOID,STOP	1	>>	>=5S0800	ORDER BY REF.No.010 NEW PART.	0.88
010	16851-60014	SOLENOID,STOP	1	>>	>=6S0001		0.88
020	01754-50612	BOLT,FLANGE	2				0.011