L3250DT -> HYDRAULIC SYSTEM -> T10800 LIFT ARM ## L3250DT

Update Date: 09/01/2014, Printing Date: 03/11/2016

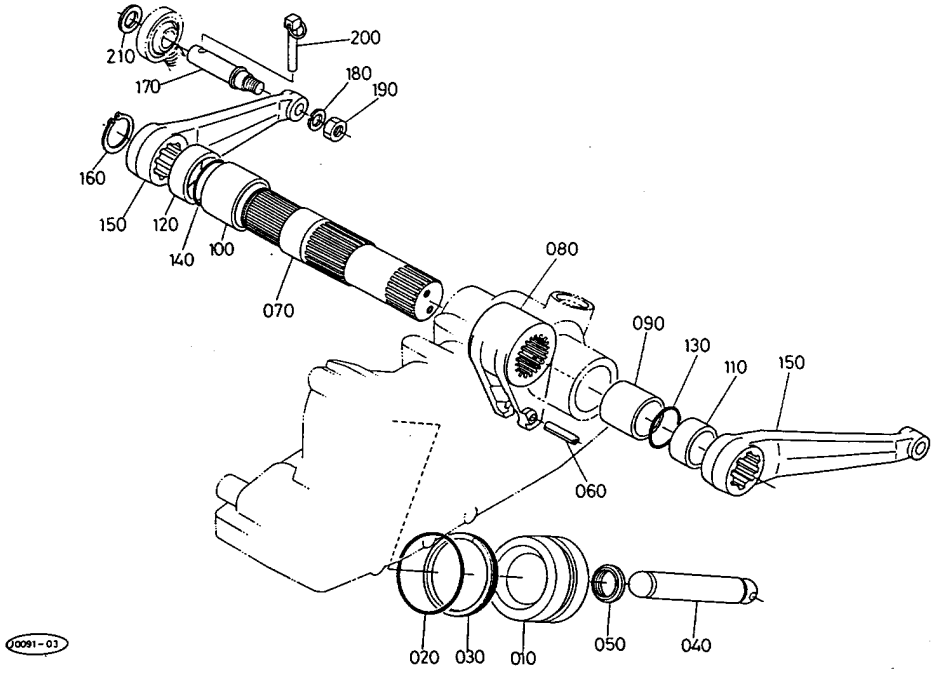

Interchangeable =, Not Interchangeable NI, New for Old >>, Old for New <<

No	Part Number	Part Name	Qty	IC	S/N	Remarks	Ibs
010	31351-37310	PISTON HYD.	1				3.025
020	04811-00750	O RING	1				0.0176
030	34350-37330	RING BACK UP	1				0.0088
040	31351-37320	ROD,HYD.	1				1.331
050	31351-37330	GUIDE,HYD.ROD	1				0.0066
060	05411-00656	PIN,SPRING	1				0.0132
070	31351-37430	SHAFT HYD.ARM	1				7.04
080	31351-37440	ARM HYDRAULIC	1				0.0
090	32240-37450	BUSH	1				0.0
100	32240-37460	BUSH	1				0.0
110	34150-37480	COLLAR	1				0.011
120	37300-37490	COLLAR	1				0.022
130	04811-50450	O RING	1				0.0066
140	04811-50500	O RING	1				0.0022
150	38240-37613	ARM LIFT	2				4.62
160	04612-00450	CIR-CLIP,EXTERNAL	1				0.0154
170	30442-37690	PIN,LIFT ROD	2				0.44
180	04512-50160	WASHER,SPRING LOCK	2				0.022
190	02174-50160	HEX.NUT	2				0.0484
200	34150-37640	PIN,SET	2				0.132
210	04011-50180	WASHER,PLAIN	2				0.0264