KIT PURPOSE

This Trim Limit Kit is designed to limit trim to -2° to +5° on DP-S drives and -6° to +12° on SX drives to minimize undesirable handling characteristics and possibly damaging the drive unit and propellers.

KIT CONTENTS

Part No.	Description	Qty.
3863007	Trim Sender (3 wire)	1
3855773	Electronic Unit	1
7742542	Installation Instructions	1

OVERVIEW

This kit involves two operations. The first operation is the removal of the existing trim/tilt sending unit and the installation of the new trim/tilt sending unit Part No. 3863007. The second operation requires the installation and calibration of the electronic unit Part No. 3855773.

⚠ DANGER:

Ensure the boats electrical power is off and disconnected from the wiring harness while working on the electrical system.

TRIM SENDER REMOVAL

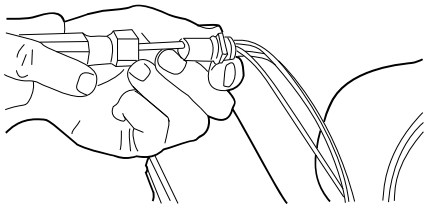

42585

1. Disconnect rubber connector at wiring harness on engine. Record the position of the sending unit wires before removing. Use Socket Removal Tool, Volvo Penta P/N 3854350 to push terminals out of rubber plug.

Note! The use of alcohol or equivalent will make socket installation into the rubber plug easier.

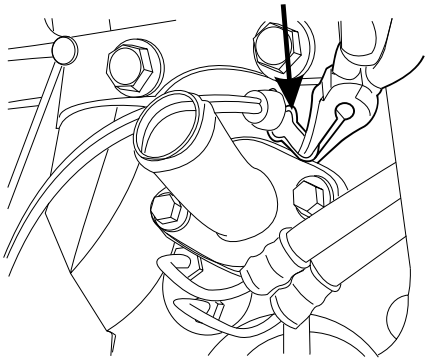

34495

2. Remove the retaining clip from the grommet.

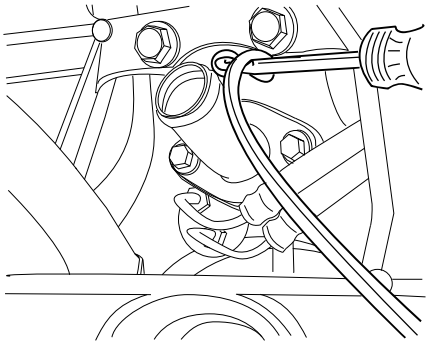

34497

3. Push the grommet out with a screwdriver. Pull the wires through the hole, cut tie straps securing wires to the trim/tilt lines, and remove the trim sender.

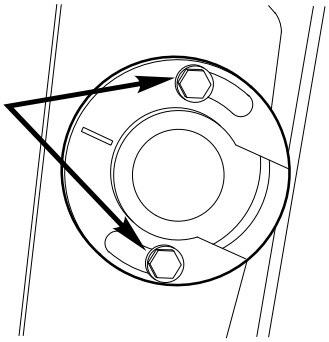

19475

4. Turn the gimbal to port and remove the two screws holding the trim sender. Carefully remove the sender and leads from the transom shield.

TRIM SENDER INSTALLATION

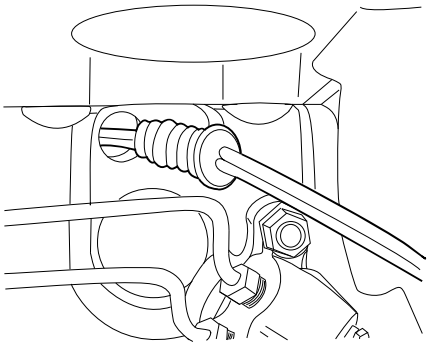

34509

5. Apply *Volvo Penta Grease* P/N 828250 to the new trim/tilt sender lead grommet. Feed the wires through the opening in the rear of the gimbal housing, and out through the transom shield.

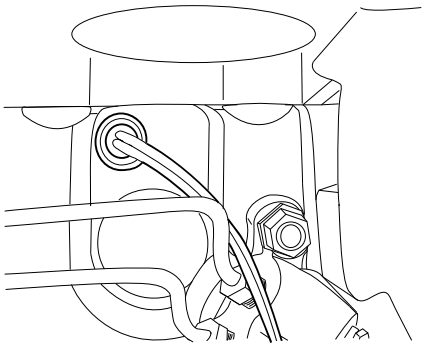

34510

6. Push the grommet into the hole until it seats.

⚠ Caution!

Do not route trim/tilt sender leads under extension tube or hydraulic lines. Leads must be free to move when drive unit steers, otherwise sender or wire will be damaged.

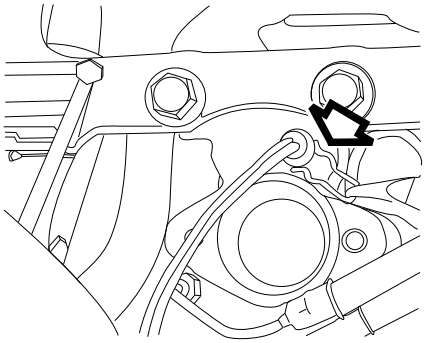

34467

7. Attach the retaining clip to the grommet inside the transom plate.

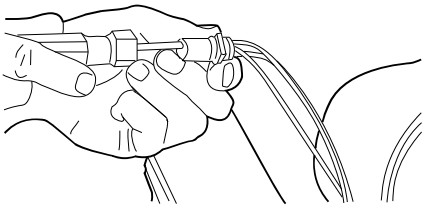

42585

8. Install the BROWN/BLACK wire in the “A” terminal, the WHITE wire in the “B” terminal and SOLID BLACK wire in the “C” terminal on the Amphenal connector. Use Socket Installer, Volvo Penta P/N 3854349, to push the wire sockets into the rubber plug until they seat.

Note! The use of alcohol will make socket installation into the rubber plug easier.

TRIM SENDER ADJUSTMENT

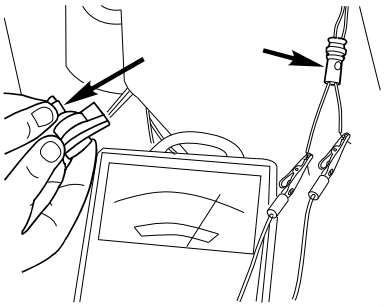

19766A

9. Connect an ohm meter to the sending unit connector. Turn the sending unit control nut until the meter reads 11 ± 1 ohm.

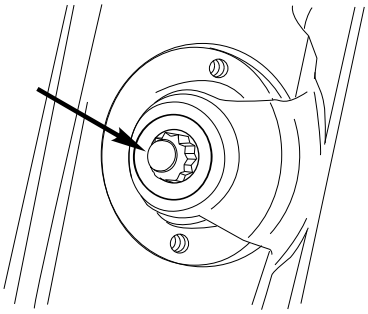

19513A

10. With lower edge of pivot housing pushed in towards the gimbal housing, insert sending unit control nut into pivot bolt head. Install two trim sender mounting screws finger tight.

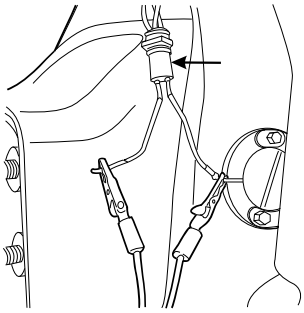

42584

11. With the pivot housing pushed in towards the gimbal housing, check adjustment of sending unit between pins “A” and “C” of the sending unit connector.

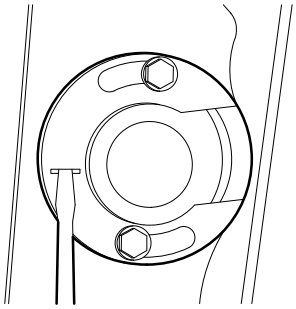

19514

12. Rotate sending unit to obtain a 11 ± 1 ohm reading on the meter, then tighten mounting screws to 18-24 in. lb. (2,0-2,7 N•m).

ELECTRONIC UNIT INSTALLATION

1. Mount the trim limit control box securely in the upper half of the transom, away from excessive heat and water, near the trim/tilt pump.

⚠ **DANGER:**

Trim limiter cables must not interfere with the movable steering components. Loss of steering control could result.

2. Apply a light coat of waterproof grease to both sides of the trim pump plug (see figure 1) leading directly to the trim pump. Align the receptacle with the cable plug and press firmly together.
3. Apply a light coat of waterproof grease to trim sender plug (see figure 1) leading directly to the transom shield. Align and connect the plug and press firmly together, secure with a retaining clip.
4. Apply a light coat of waterproof grease to trim override plug (see figure 1) leading to the instrument cable override lead. Align and connect the plug and press firmly together.
5. Apply a light coat of waterproof grease to trim control plug (see figure 1) leading to the instrument panel trim/tilt harness. Align and connect the plug and press firmly together.
6. Apply a light coat of waterproof grease to both sides of engine harness connector plug (see figure 1). On diesel applications, this connector will connect directly to the trim cable leading to the trim controls and bypass the engine wiring harness. Align receptacle with the cable plug and press firmly together, secure with a retaining clip.

NOTE: **All EFI engines are equipped with a "slave" connector plug that resembles the trim engine wiring harness plug but the wire colors do not match. The trim limiter will not work if connected to this plug. Ensure the correct connector is used with a black wire and a brown/white trace wire to connect the "engine harness" connector on the back of the engine.**

7. **<u>On SX Models Only</u>: To change the DP trim limits of -2° to +5° to the SX trim limits of -6° to +12° follow the procedure outlined in the "Setting New Trim/Tilt Limits" section of this instruction. Cut the white jumper wire to allow the trim gauge proper movement for the larger trim range of the SX.**
8. Route all the trim cables away from moving parts or other areas that may allow the cables to be chafed, or damaged, and away from all hot engine components. Use tie straps or tape (not supplied in the kit) to maintain routing of the cables, as required.

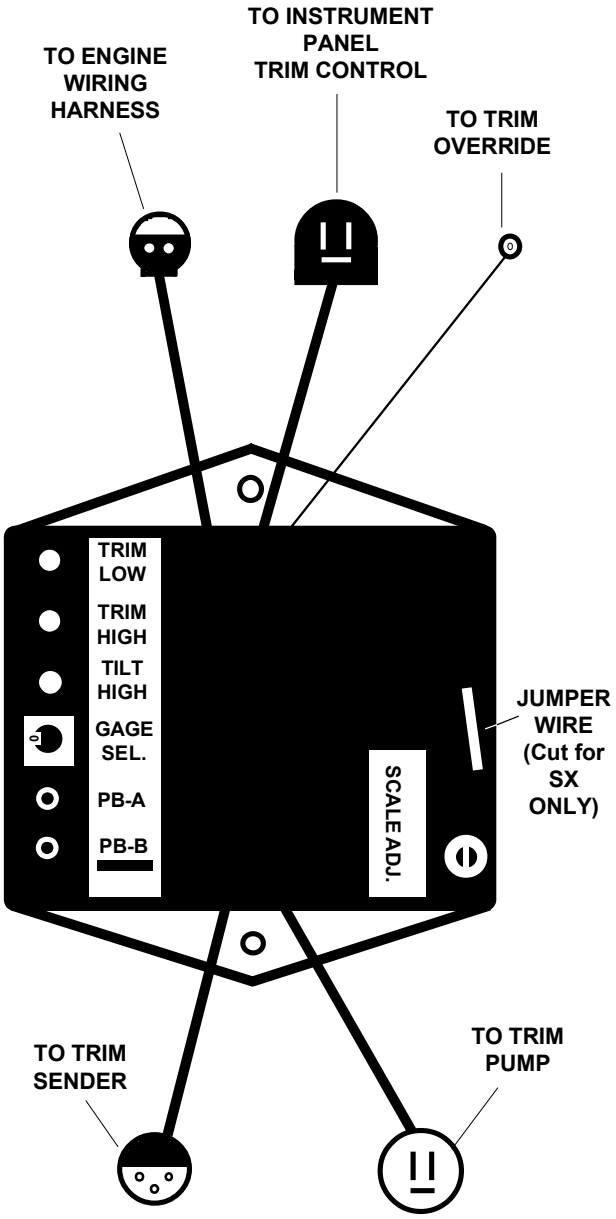

Figure 1. Trim Limiter Connection Identification

SETUP AND CALIBRATION

NOTE: **Each trim limiter must be setup for the type of trim gauge being used. Calibration only needs to take place in boats with a transom angle other than 13°, an SX drive is being used, or if a tilt limit needs to be set for a swim platform for example.**

NOTE: **If you are not sure of the boat's transom angle proceed with the method 2 procedure.**

The trim limiter system has three set points that once set, will limit the trim range and tilt range of the drive unit. The factory settings of these limits are based on a boat with a 13° transom angle. Trim is limited on a 13° transom angle to +5° to -2° for the DuoProp® and +12° to -6° for the SX and tilt is limited to 45° on both models. If necessary, any of these limits may be changed to accommodate other transom angles and/or swim platforms. **In order to properly set the trim limiter, 'zero' trim must first be determined as in figure 2.** We provide two methods in determining zero trim. Method 1 requires the installer to know the boat's transom angle. Method 2 is used if the transom angle cannot be easily determined.

METHOD 1 - DETERMINING TRIM/TILT ZERO (TRANSOM ANGLE KNOWN)

NOTE: The transom angle can be determined by holding a carpenter's square along the flat portion of the boat's bottom and bring in the square until the end contacts the transom. Read the measurement at the intersection of the hull bottom and the transom. Each ¼-inch of measurement = 1 degree of transom angle.

1. After determining the boats transom angle move the drive to the zero trim position by extending or retracting the drive until the trim/tilt cylinders are at the proper measurement for zero (0) as shown in table 1 on the next page under the appropriate transom angle column.
2. Once zero is established, "sight-in" the drive and boats bottom as shown in figure 2 to verify accuracy. If the anti-ventilation plate and boats bottom do not appear parallel use Method 2 to zero out the drive.
3. Using the measurements given in table 1 measure the trim cylinder extension to position the drive at the proper angles as required to setup the trim limiter.

METHOD 2 - DETERMINING TRIM/TILT ZERO (TRANSOM ANGLE UNKNOWN)

1. Ensure the electrical system is properly connected and restore electrical power to the boat's electrical system.
2. **IMPORTANT:** Place the boat on a secure cradle, trailer, or other approved boat holding device. Adjust the drive unit so that the anti-ventilation plate is parallel to the boat's bottom, refer to figure 2. Use a straight edge along the boat's bottom to aid in determining these lines. On a few boats, there may be a slight hook designed into the hull near the transom, disregard this hook and use the keel

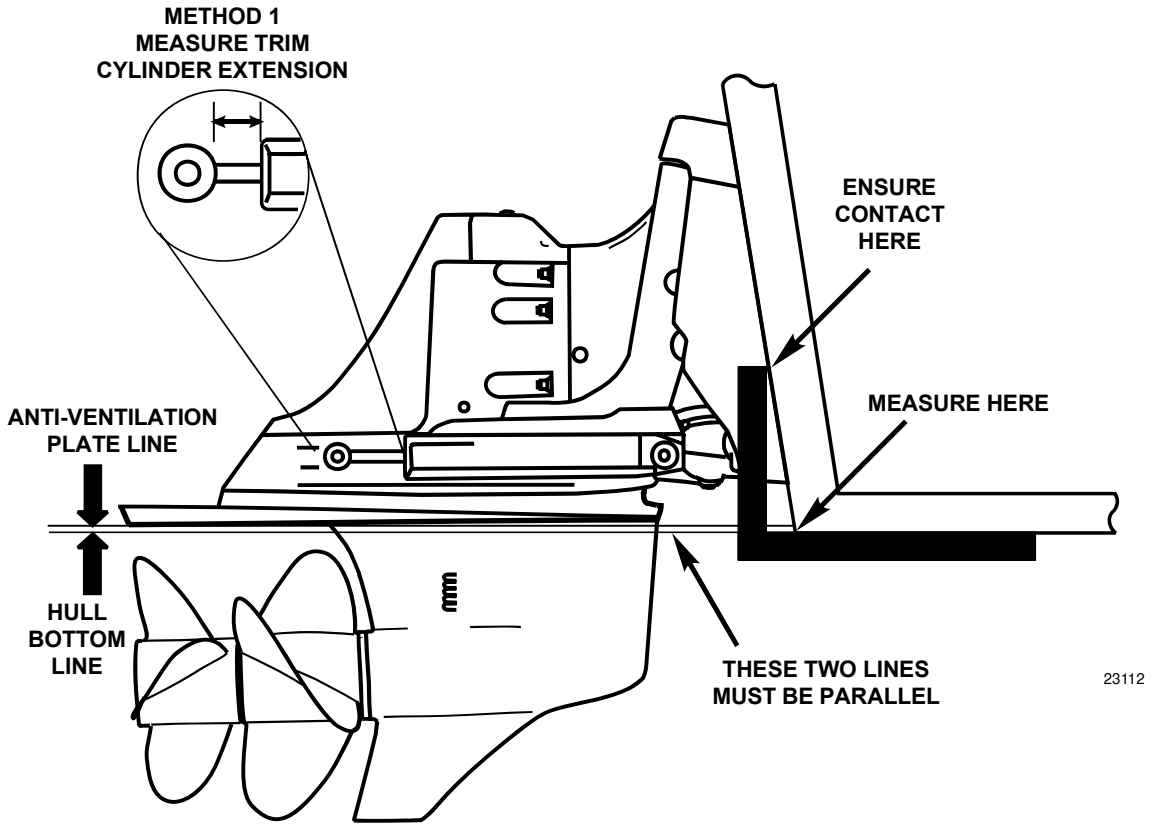

Figure 2. Determining Proper Positioning of Drive Unit for Protractor Setup

line over its greatest length to determine the exact bottom or keel line. Once both lines are determined to be parallel, zero out a universal level protractor or resettable electronic level along the boat's bottom or keel line. Recheck the underside of the anti-ventilation plate line with either level to ensure the reading is zero or adjust the drive to zero as necessary.

SETTING NEW TRIM/TILT LIMITS

If this trim limiter unit is being used on a boat with DuoProp® with a 13° transom equipped with a swim platform you must do steps 1 and 2 then you can skip ahead to step 6 and set the high tilt limit without changing the trim limit settings. For all other transom angles and/or for SX drives complete every step in this procedure.

1. Turn the **GAGE SEL.** switch on the limiter box to the "**0**" position. All three lamps (**TRIM LOW, TRIM HIGH, TILT HIGH**) on the trim limiter box should be flashing. The trim gauge needle will move to the upper segment of the gauge and remain there until the setup procedure is completed and the **GAGE SEL.** switch is moved from the "**0**" position.
2. **Setting Lower Trim Stop Limit:** Adjust the drive unit to the lower trim limit of -2° and make appropriate measurements using a inside caliper (if using Method 1) or a universal level protractor or resettable electronic level (if using Method 2) on the underside of the anti-ventilation plate to measure the angle. Push **PB-A** button on the trim limiter box and hold for four seconds. The GREEN **TRIM LOW** lamp should light up then go out. When **PB-A** button is released all three lamps should begin flashing again. The lower trim limit is now set.
3. **Setting Upper Trim Stop Limit:** Adjust the drive unit to the upper trim limit of +5° for the DuoProp® and +12° for the SX, take appropriate measurements to verify trim angle. Press **PB-B** button on the trim limiter box for four seconds. The YELLOW **TRIM**

Method 1. Determining Trim Angle by Trim Cylinder Extension

Transom Angle						Trim Ram Dimension		
15°	14°	13°	12°	11°	10°	Decimal Inches	Fractional Inches	Millimeters
-9	-8	-7	-6	-5	-4	1.90	1-29/32	48.26
-8	-7	-6	-5	-4	-3	2.07	2-5/64	52.58
-7	-6	-5	-4	-3	-2	2.21	2-7/32	56.13
-6	-5	-4	-3	-2	-1	2.36	2-23/64	59.94
-5	-4	-3	-2	-1	0	2.53	2-17/32	64.26
-4	-3	-2	-1	0	1	2.68	2-11/16	68.07
-3	-2	-1	0	1	2	2.83	2-53/64	71.88
-2	-1	0	1	2	3	2.97	2-31/32	75.44
-1	0	1	2	3	4	3.13	3-1/8	79.50
0	1	2	3	4	5	3.27	2-9/32	83.06
1	2	3	4	5	6	3.40	3-13/32	86.36
2	3	4	5	6	7	3.58	3-37/64	90.93
3	4	5	6	7	8	3.74	3-47/64	95.00
4	5	6	7	8	9	3.89	3-57/64	98.81
5	6	7	8	9	10	4.04	4-3/64	102.62
6	7	8	9	10	11	4.21	4-7/32	106.93
7	8	9	10	11	12	4.38	4-3/8	111.25
8	9	10	11	12	13	4.54	4-35/64	115.32

SX Trim Range

DP-S Trim Range

HIGH lamp will light up and then go out. When **PB-B** button is released all three lamps should begin flashing again. The upper trim limit is now set.

4. **Setting Upper Tilt Stop Limit:** Adjust the drive unit to 1½" to 2" of the maximum tilt position taking into account swim platforms and other items that the drive should not be allowed to hit. Press both **PB-A** and **PB-B** buttons at the same time and hold for four seconds. The RED **TILT HIGH** lamp should light up and then go out. When both **PB-A** and **PB-B** buttons are released all three lamps should begin flashing again. The tilt maximum limit is now set. **All new trim/tilt limits are now set.**

5. **Calibrating Trim Gauge:** Move the rotary **GAGE SEL.** switch from the "**0**" position to the appropriate gauge selection listed below. All lamps should go out and stay out at this point.

   0 **Setup/Calibration Only**

   1 *Volvo Penta* (P/N 3851788) VDO (P/N 01-210-415)

   2 *Volvo Penta* Kit (P/N 857449) VDO (P/N X-19-270-3123) VDO "Vanguard" (P/N 1-275-810-136A)

   3 OMC SysteMatched™ (P/N 175054, 175484, 175616, 175852, 175546, 174748, 175648) Faria (P/N GP9318B)*

   4 Teleflex (P/N 20742 & 58031) Medallion (P/N SIK-140-30W Rev. A, SIK-112-30W, Rev. A)

   5 Faria (P/N GP9374D)*

   6-7 Not Used

* Will require **SCALE ADJ.** calibration.

6. **Setting Trim Gauge To Lowest Range:** Move the drive unit to the lowest possible position by pressing the override button and the trim down button at the same time and hold until the drive stops. Adjust the **SCALE ADJ.** knob on the trim limiter box so that the trim gauge needle is at the bottom of the trim scale.

⚠ **DANGER:**

Operating the sterndrive unit at engine speeds higher than 1500 RPM outside of the trim limits (DuoProp® trim limit is -2° to +5°), could cause undesirable boat handling characteristics resulting in the loss of control and damage to the sterndrive and propellers.

NOTE: Never operate the engine with the drive tilted past +30° or the drive can be damaged.

TROUBLESHOOTING CHECKS

1. **Trim/tilt and Override Switch Functions**:

   a. The **GREEN** lamp follows the **TRIM DOWN SWITCH**. If you close the trim down switch, the green lamp should be illuminated.

   b. The **YELLOW** lamp follows the **TRIM UP SWITCH**. If you close the trim up switch, the yellow lamp should be illuminated.

   c. The **RED** lamp follows the **OVERRIDE SWITCH**. If you close the override switch, the red lamp should be illuminated.

2. **Trim Sender Unit and Associated Wiring**:

   a. If the trim sender unit that is mounted in the transom shield should be seriously out of adjustment, broken, or has a defective cable, the needle on the trim gauge will read high until the problem is corrected.

   b. Use the override switch to permit drive trim to go as far down as possible until the mechanical stop is reached. With the drive trimmed as far down as possible, check the resistance between pins “A” and “C” (both black wires) using a digital multimeter, the reading should be 11 ohms.

Note! The trim gauge needle will cyle between up and down repeadily if the the sending unit is set with less than 11 ohms at the maximum down position.

   c. Recheck all electrical connectors to ensure they are properly connected and seated.

3. **Low Battery Voltage**:

   a. If the battery voltage falls below about 10.5 volts, the trim gauge needle will go high until the voltage rises above 10.5 volts.

   b. Use the override switch to permit drive trim/tilt. If the battery voltage falls below about 8.5 volts, the trim limiter module will shut off and not permit trim/tilt operation.