Intake Manifold

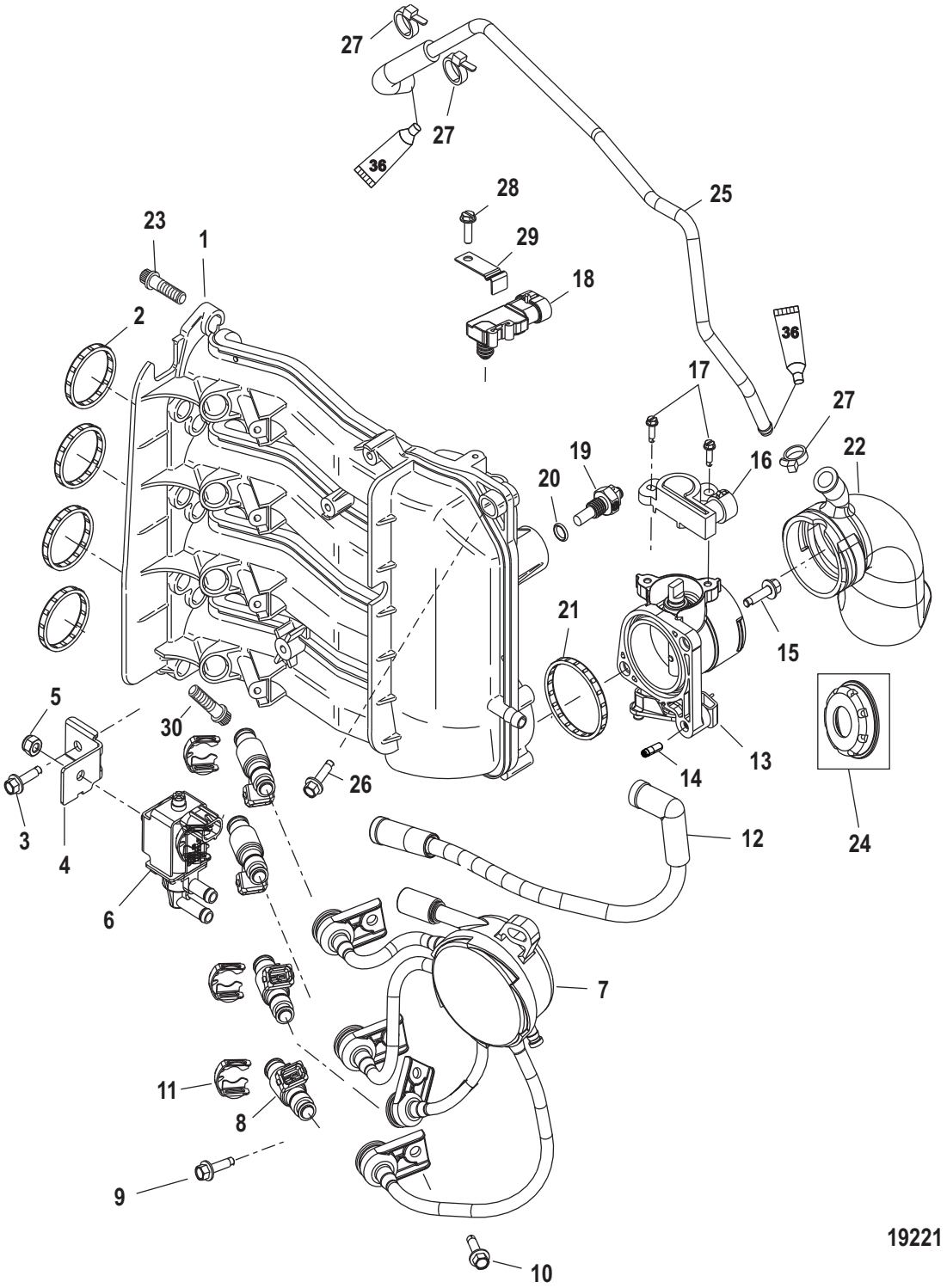

[0T409000 THRU 1B344306] - USA - Cat.# 90-88387502

Intake Manifold

#	PART #	DESCRIPTION	QTY	Note
-	877829T03	MANIFOLD ASSEMBLY Intake - Complete	1	
-	877829T04	MANIFOLD ASSEMBLY Intake - Complete	1	
-	877829T05	MANIFOLD ASSEMBLY Intake - Complete	1	
1	877829T	MANIFOLD Intake	1	
1	877829T01	MANIFOLD Intake	1	
2	879866	GASKET SET	1	
3	881059	SCREW	1	
4	877834	BRACKET	1	
5	401366	NUT (M6) Stainless Steel	1	
6	877805T	SOLENOID VALVE	1	
7	879887T	TFI SYSTEM	1	
8	877826	INJECTOR	4	
8	892123	INJECTOR	4	
8	892123	INJECTOR	4	
8	892123001	INJECTOR	4	
8	892123002	INJECTOR	4	
9	881059	SCREW	2	
10	881059	SCREW	4	
11	883460	CLIP	4	
12	877831A1	HOSE	1	
13	877831T	THROTTLE BODY	1	
13	877831A02	THROTTLE BODY ASSEMBLY	1	
14	8M0000578	SCREW Adjustment	1	
15	881059	SCREW	2	
16	881070T	SENSOR Position	1	
17	881060	SCREW	2	
18	854445	SENSOR Map	1	
19	858535	SENSOR ASSEMBLY Temperature	1	
19	885342001	SENSOR ASSEMBLY	1	
20	627021	O-RING (.301 x .070)	1	
20	888814	O-RING (.351 x .072)	1	
21	879867	GASKET	1	
22	881063T	ATTENUATOR Sound	1	
22	881063T	ATTENUATOR Sound	1	
22	893521	ATTENUATOR	1	
22	893521	ATTENUATOR	1	
23	8248326	SCREW (M6 x 25 MM)	8	
24	8831483	RESTRICTOR	1	
24	8831482	RESTRICTOR	1	
25	880755A1	BREATHER HOSE	1	
26	82684430	SCREW (M6 x 30)	1	
27	816311T	TIE STRAP (8.00 Inches)	3	
28	8214281	SCREW (#10-16 x .625)	1	
29	883832	RETAINER	1	
-	883599A02	GASKET SET	1	