DTC	P0110	Intake Air Temperature Circuit

DTC	P0112	Intake Air Temperature Circuit Low Input

DTC	P0113	Intake Air Temperature Circuit High Input

DESCRIPTION

The Intake Air Temperature (IAT) sensor, mounted on the Mass Air Flow (MAF) meter, monitors the IAT. The IAT sensor has a built-in thermistor with a resistance that varies according to the temperature of the intake air. When the IAT is low, the resistance of the thermistor increases. When the temperature is high, the resistance drops. These variations in resistance are transmitted to the ECM as voltage changes (see Fig. 1).

The IAT sensor is powered by a 5 V applied from the THA terminal of the ECM, via resistor R. Resistor R and the IAT sensor are connected in series. When the resistance value of the IAT sensor changes, according to changes in the IAT, the voltage at terminal THA also varies. Based on this signal, the ECM increases the fuel injection volume when the engine is cold to improve drivability.

(Figure 1)

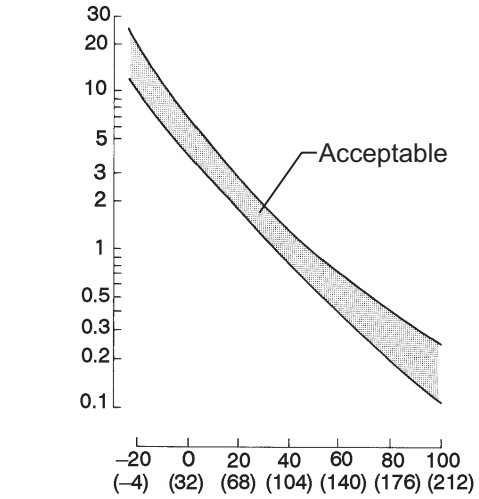

HINT:

When any of DTCs P0110, P0112 and P0113 are set, the ECM enters fail-safe mode. During fail-safe mode, the IAT is estimated to be 20°C (68°F) by the ECM. Fail-safe mode continues until a pass condition is detected.

DTC No.	Proceed to	DTC Detection Conditions	Trouble Area
P0110	Step 1	Open or short in Intake Air Temperature (IAT) sensor circuit for 0.5 seconds (1 trip detection logic)	• Open or short in IAT sensor circuit • IAT sensor (built into MAF meter) • ECM
P0112	Step 4	Short in Intake Air Temperature (IAT) sensor circuit for 0.5 seconds (1 trip detection logic)	• Short in IAT sensor circuit • IAT sensor (built into MAF meter) • ECM

DTC No.	Proceed to	DTC Detection Conditions	Trouble Area
P0113	Step 2	Open in Intake Air Temperature (IAT) sensor circuit for 0.5 seconds (1 trip detection logic)	• Open in IAT sensor circuit • IAT sensor (built into MAF meter) • ECM

HINT:
When any of these DTCs are set, check the IAT by selecting the following menu items on the intelligent tester: DIAGNOSIS / ENHANCED OBD II / DATA LIST / PRIMARY / INTAKE AIR.

Temperature Displayed	Malfunctions
-40°C (-40°F)	Open circuit
140°C (284°F) or higher	Short circuit

ES

MONITOR DESCRIPTION

The ECM monitors the sensor voltage and uses this value to calculate the Intake Air Temperature (IAT). When the sensor output voltage deviates from the normal operating range, the ECM interprets this as a malfunction in the IAT sensor and sets a DTC.

Example:

If the sensor voltage output is -40°C (-40°F) for 0.5 seconds or more, the ECM determines that there is an open in the IAT sensor circuit, and sets DTC P0113. Conversely, if the voltage output is more than 140°C (284°F) for 0.5 seconds or more, the ECM determines that there is a short in the sensor circuit, and sets DTC P0112.

If the malfunction is not repaired successfully, a DTC is set 0.5 seconds after the engine is next started.

MONITOR STRATEGY

Related DTCs	P0110: IAT sensor range check (Fluttering) P0112: IAT sensor range check (Low voltage) P0113: IAT sensor range check (High voltage)
Required Sensors / Components (Main)	Intake Air Temperature (IAT) sensor
Required sensors / Components (Related)	-
Frequency of Operation	Continuous
Duration	0.5 seconds
MIL Operation	Immediate
Sequence of Operation	None

TYPICAL ENABLING CONDITIONS

The monitor will run whenever these DTCs are not present	None

TYPICAL MALFUNCTION THRESHOLDS

P0110:

Intake air temperature sensor voltage	Less than 0.18 V or more than 4.91 V [More than 140°C (284°F), or less than -40°C (-40°F)]

P0112:

Intake air temperature sensor voltage	Less than 0.18 V [More than 140°C (284°F)]

P0113:

Intake air temperature sensor voltage	More than 4.91 V [Less than -40°C (-40°F)]

COMPONENT OPERATING RANGE

Intake air temperature sensor voltage	0.18 V to 4.91 V [-40 to 140°C (-40 to 284°F)]

WIRING DIAGRAM

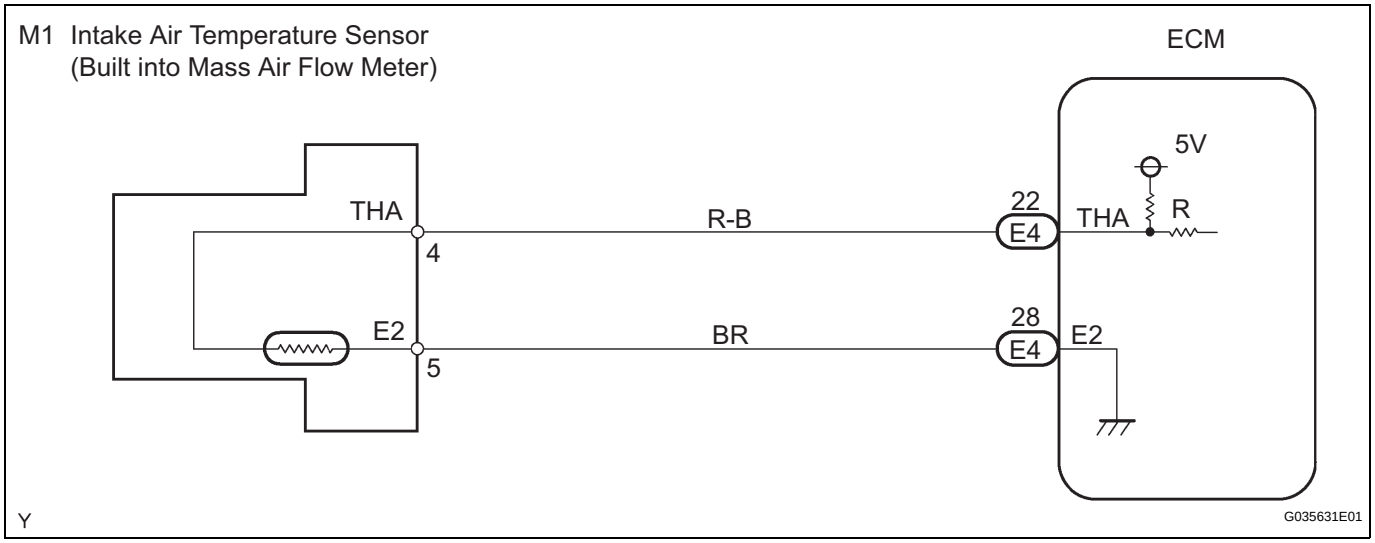

INSPECTION PROCEDURE

HINT:

- If other DTCs relating to different systems that have terminal E2 as the ground terminal are output simultaneously, terminal E2 may have an open circuit.
- Read freeze frame data using the intelligent tester. The ECM records vehicle and driving condition information as freeze frame data the moment a DTC is stored. When troubleshooting, freeze frame data can be helpful in determining whether the vehicle was running or stopped, whether the engine was warmed up or not, whether the air/fuel ratio was lean or rich, as well as other data recorded at the time of a malfunction.

1	READ VALUE OF INTELLIGENT TESTER (INTAKE AIR TEMPERATURE)

(a) Connect the intelligent tester to the DLC3.
(b) Turn the ignition switch on.
(c) Turn the tester on.
(d) Select the following menu items: DIAGNOSIS / ENHANCEDOBD II / DATA LIST / PRIMARY / INTAKE AIR.
(e) Read the value displayed on the tester.
Standard:
Same as actual Intake Air Temperature (IAT).

Result

Temperature Displayed	Proceed to
-40°C (-40°F)	A
140°C (284°F) or higher	B
Same as actual IAT	C

HINT:

- If there is an open circuit, the intelligent tester indicates -40°C (-40°F).

- If there is a short circuit, the intelligent tester indicates140°C (284°F) or higher.

B	**Go to step 4**
C	**CHECK FOR INTERMITTENT PROBLEMS**

A

2	READ VALUE OF INTELLIGENT TESTER (CHECK FOR OPEN IN WIRE HARNESS)

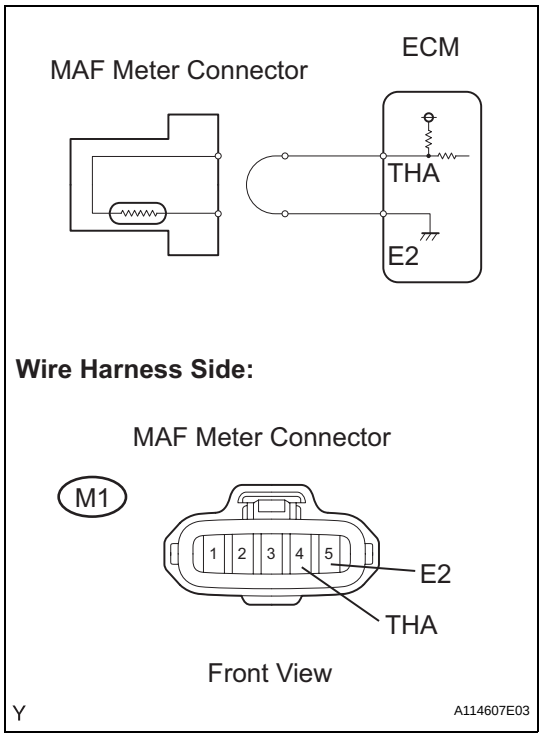

(a) Disconnect the M1 Mass Air Flow (MAF) meter connector.
(b) Connect terminals THA and E2 of the MAF meter wire harness side connector.
(c) Connect the intelligent tester to the DLC3.
(d) Turn the ignition switch on.
(e) Turn the tester on.
(f) Select the following menu items: DIAGNOSIS / ENHANCED OBD II / DATA LIST / PRIMARY / INTAKE AIR.
(g) Read the value displayed on the tester.
Standard:
140°C (284°F) or higher
(h) Reconnect the MAF meter connector.

OK	**CONFIRM GOOD CONNECTION TO SENSOR. IF OK, REPLACE MASS AIR FLOW METER**

NG

3	READ VALUE OF INTELLIGENT TESTER (CHECK FOR OPEN IN ECM)

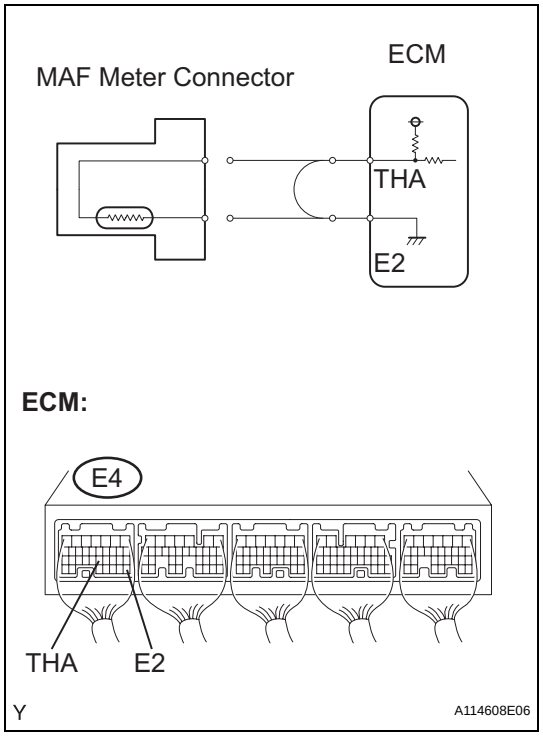

(a) Disconnect the M1 MAF meter connector.
(b) Connect terminals THA and E2 of the B45 ECM connector.
HINT:
Before checking, do visual and contact pressure checks on the ECM connector.
(c) Connect the intelligent tester to the DLC3.
(d) Turn the ignition switch on.
(e) Turn the tester on.
(f) Select the following menu items: DIAGNOSIS / ENHANCED OBD II / DATA LIST / PRIMARY / INTAKE AIR.
(g) Read the value displayed on the tester.
Standard:
140°C (284°F) or higher
(h) Reconnect the MAF meter connector.

OK → **REPAIR OR REPLACE HARNESS OR CONNECTOR**

NG

CONFIRM GOOD CONNECTION TO ECM. IF OK, REPLACE ECM

4	READ VALUE OF INTELLIGENT TESTER (CHECK FOR SHORT IN WIRE HARNESS)

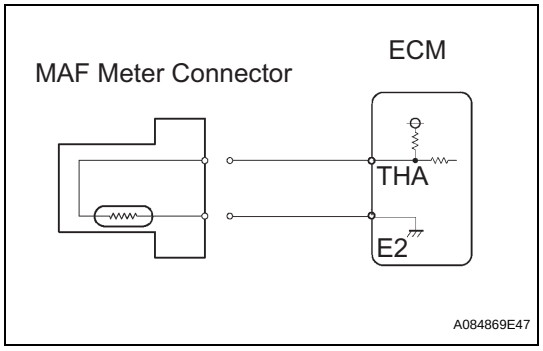

(a) Disconnect the M1 MAF meter connector.
(b) Connect the intelligent tester to the DLC3.
(c) Turn the ignition switch on.
(d) Turn the tester on.
(e) Select the following menu items: DIAGNOSIS / ENHANCED OBD II / DATA LIST / PRIMARY / INTAKE AIR.
(f) Read the value displayed on the tester.
Standard:
-40°C (-40°F)
(g) Reconnect the MAF meter connector.

OK → **CONFIRM GOOD CONNECTION TO SENSOR. IF OK, REPLACE MASS AIR FLOW METER**

NG

ES

5	READ VALUE OF INTELLIGENT TESTER (CHECK FOR SHORT IN ECM)

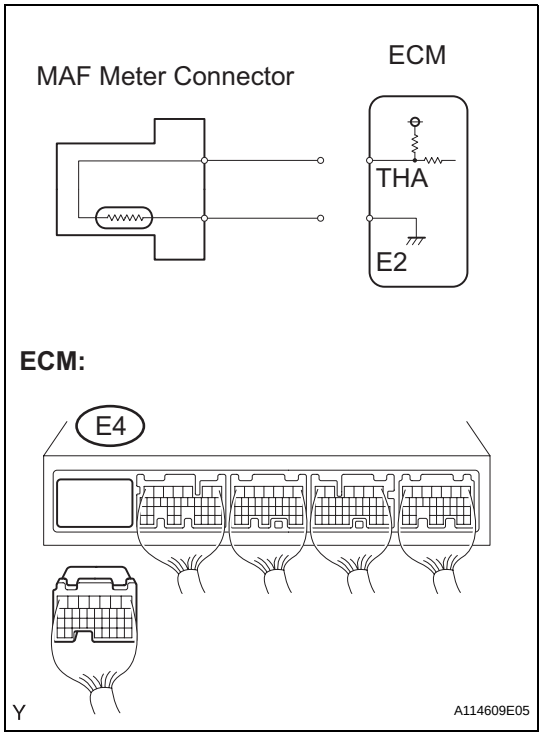

(a) Disconnect the E4 ECM connector.
(b) Connect the intelligent tester to the DLC3.
(c) Turn the ignition switch on.
(d) Turn the tester on.
(e) Select the following menu items: DIAGNOSIS / ENHANCED OBD II / DATA LIST / PRIMARY / INTAKE AIR.
(f) Read the value displayed on the tester.
Standard:
-40°C (-40°F)
(g) Reconnect the ECM connector.

OK → **REPAIR OR REPLACE HARNESS OR CONNECTOR**

NG

REPLACE ECM