14.Headlight Bulb

A: REMOVAL

1. HIGH BEAM

CAUTION:
- **Because the halogen bulb operates at a high temperature, dirt and oil on the bulb surface reduces the bulb's service life. Hold the flange portion when replacing the bulb. Never touch the glass portion.**
- **Do not leave the headlight without a bulb for a long time. Dust, moisture, etc. entering the headlight may affect its performance.**

1) Disconnect the ground cable from battery.
2) Remove the clips and remove the air intake duct. (When removing the headlight high beam bulb RH)

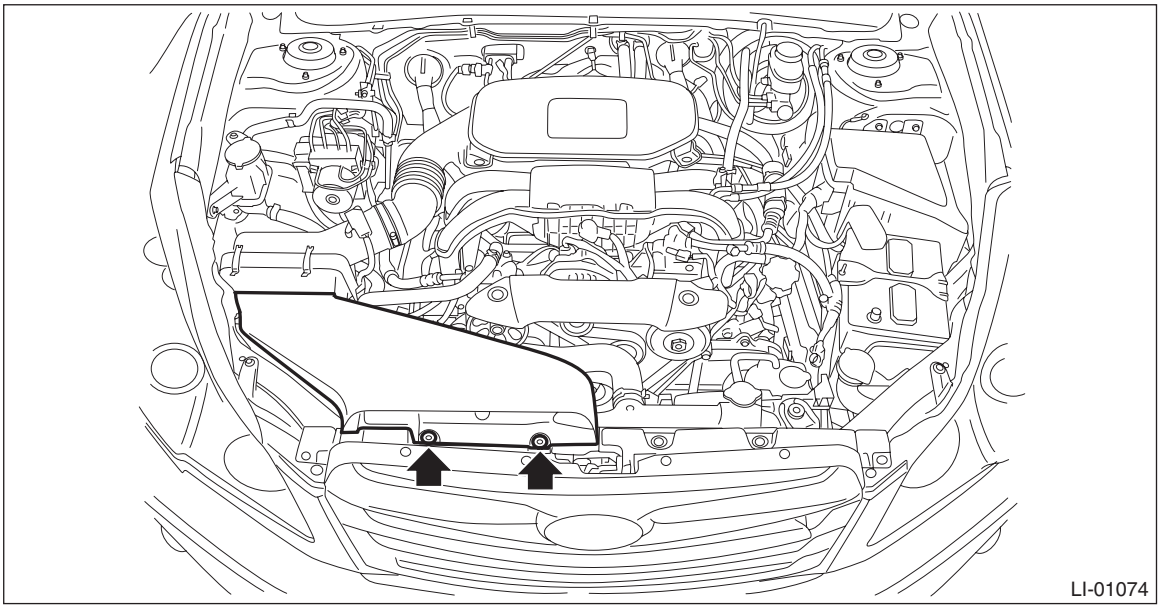

3) Disconnect the connector and remove the headlight high beam bulb.

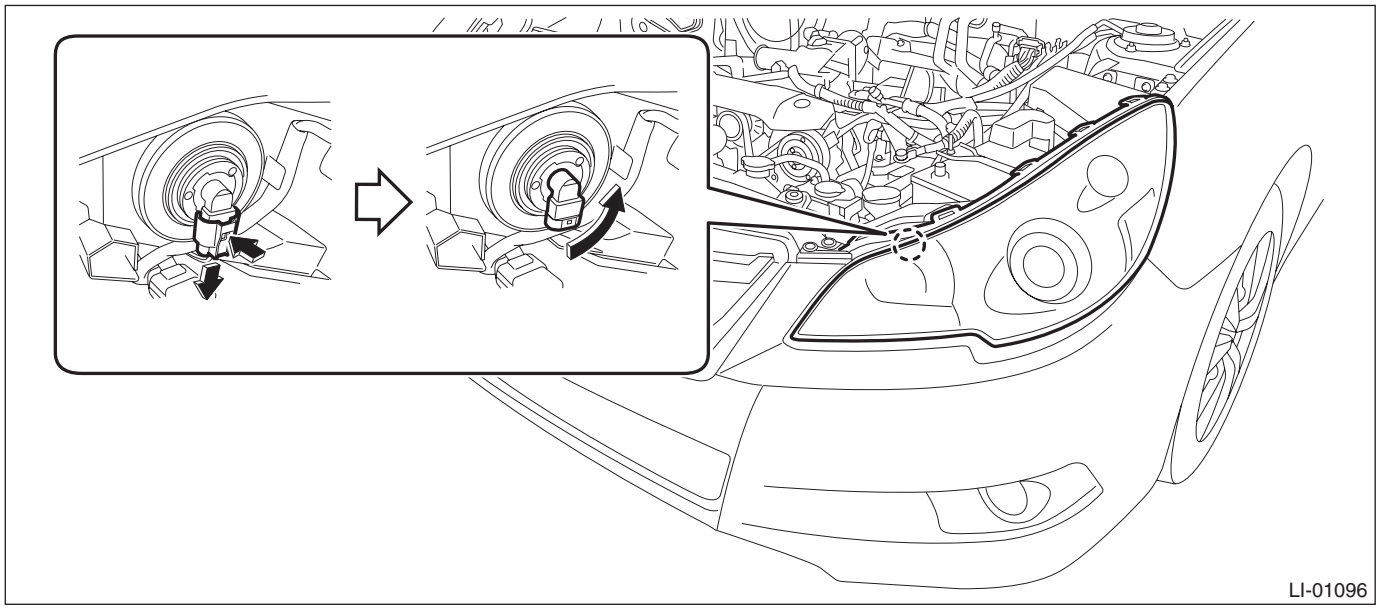

2. LOW BEAM

CAUTION:

- **Because the halogen bulb operates at a high temperature, dirt and oil on the bulb surface reduces the bulb's service life. Hold the flange portion when replacing the bulb. Never touch the glass portion.**
- **Do not leave the headlight without a bulb for a long time. Dust, moisture, etc. entering the headlight may affect its performance.**

1) Disconnect the ground cable from battery.
2) Remove the clips and remove the air intake duct. (When removing the headlight low beam bulb RH)

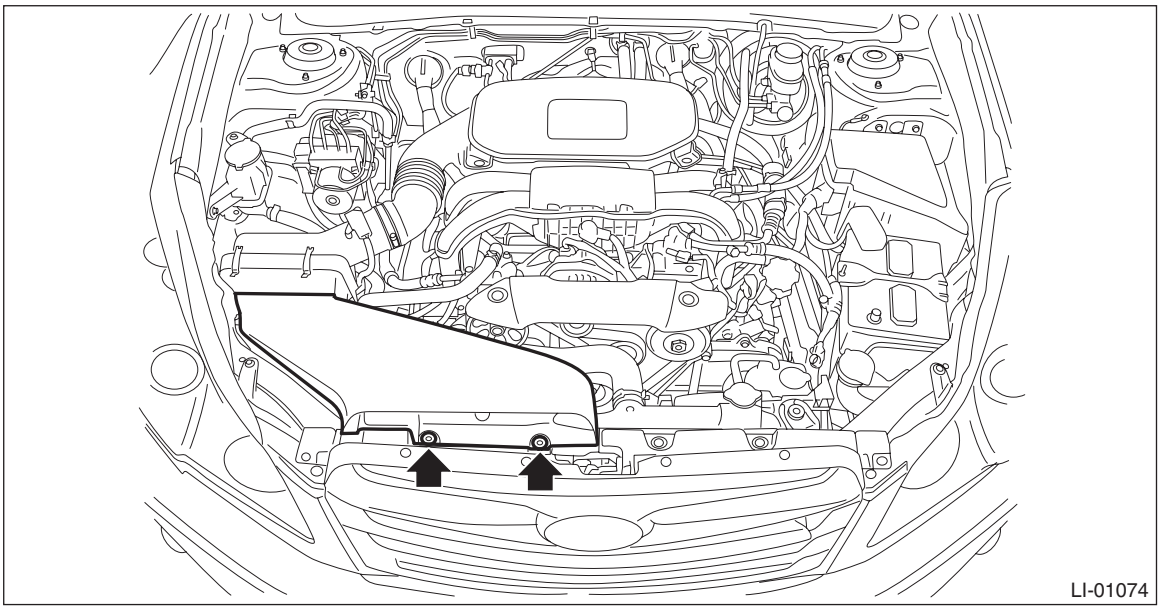

3) Turn the steering wheel in the opposite direction to the headlight to be removed. Then remove the clips and turn over the mud guard.

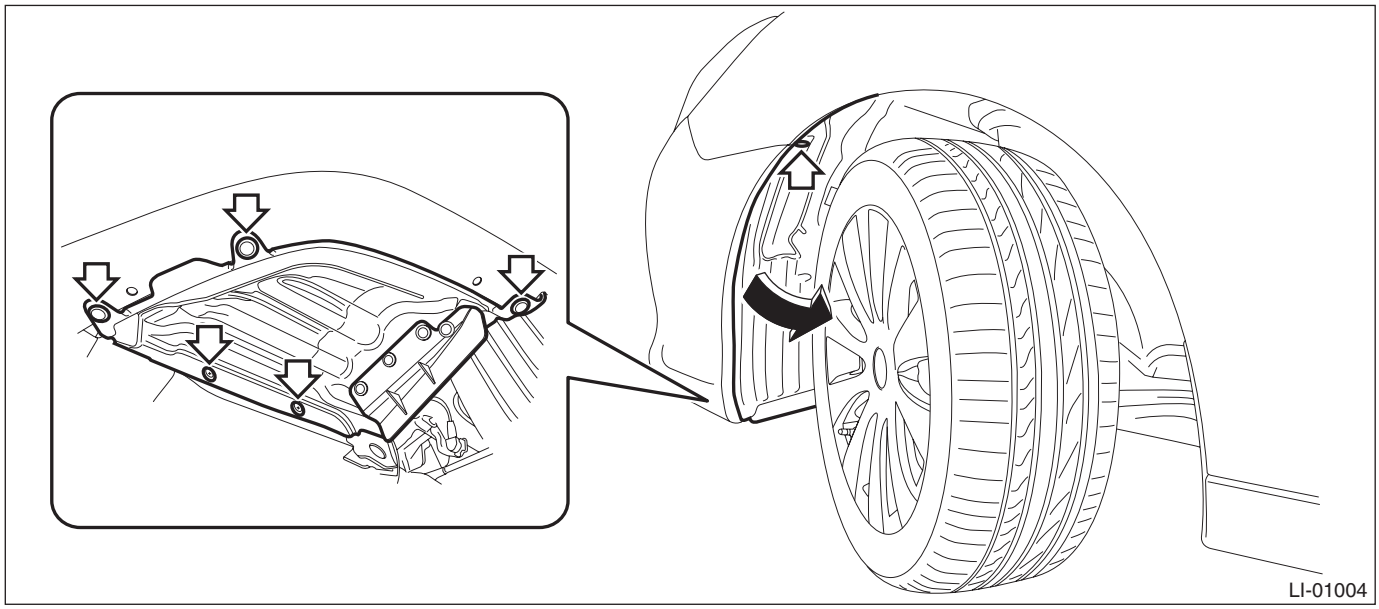

4) Remove the headlight low beam bulb.

(1) Remove the back cover.

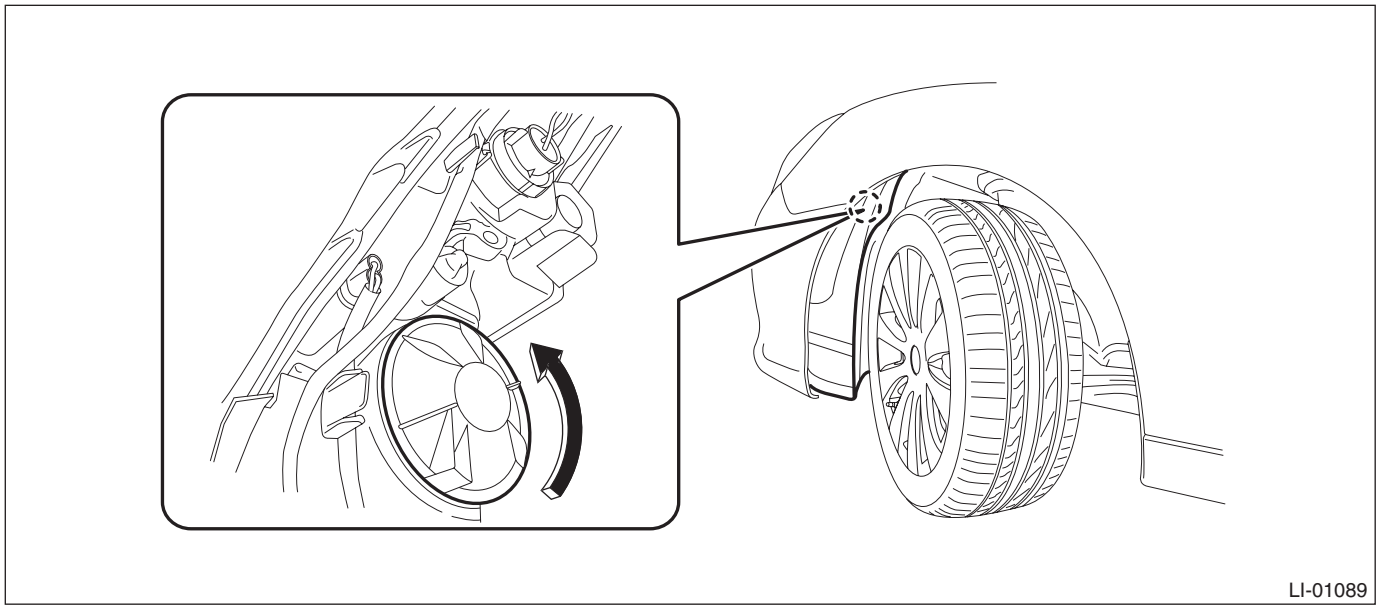

(2) Unlock the bulb socket and bulb spring, and remove the headlight low beam bulb.

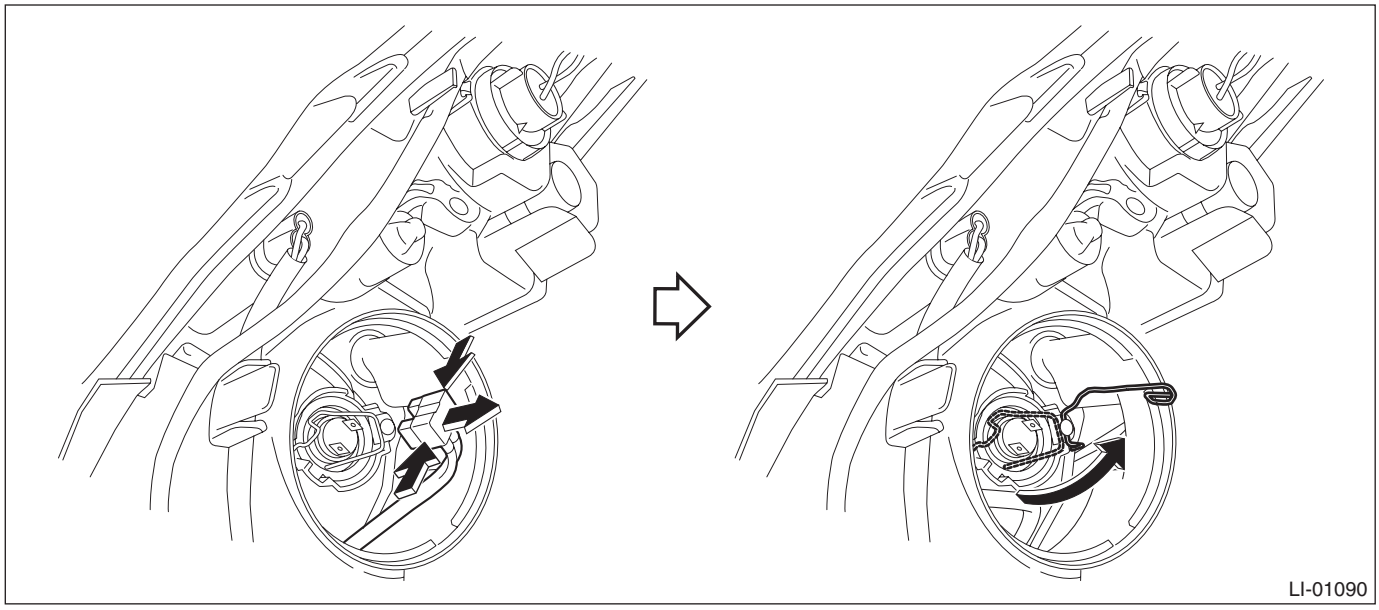

B: INSTALLATION

NOTE:
When installing the back cover, turn it to the position shown in the figure to lock while pressing the entire periphery of the cover.

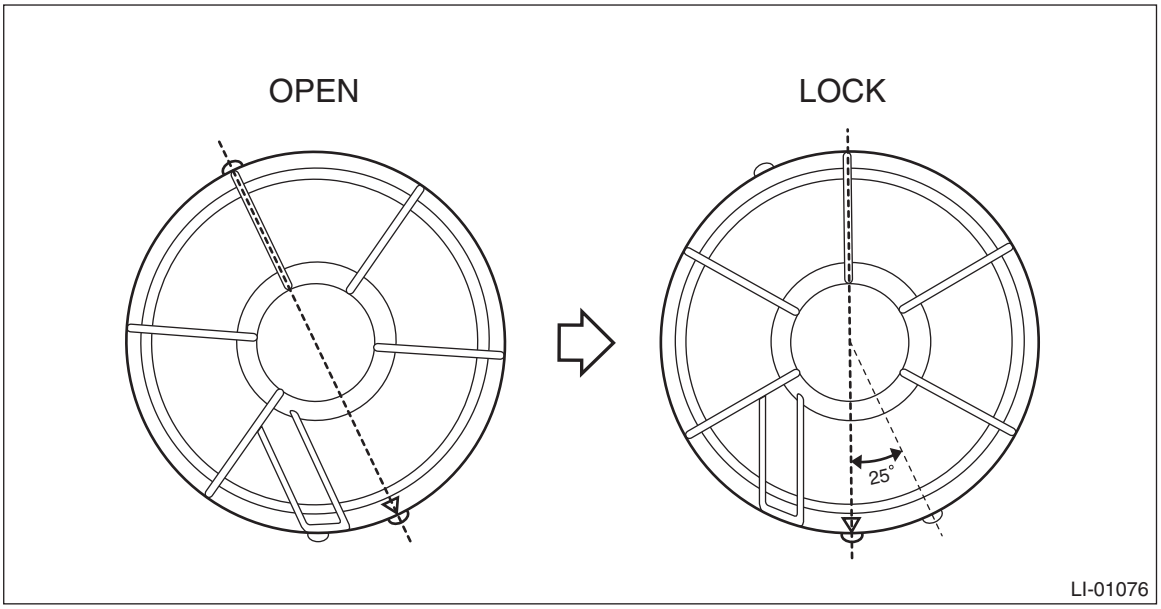

Install each part in the reverse order of removal.

C: INSPECTION

1) Visually check the bulb for blow out.
2) Check the bulb specification. <Ref. to LI-2, SPECIFICATION, General Description.>
3) Replace the bulb if it is found defective.